US 20170031087A1

(19) United States

(12) Patent Application Publication

JEON et al.

(10) Pub. No.: US 2017/0031087 A1

(43) Pub. Date: Feb. 2, 2017

(54) **DISPLAY APPARATUS**

(71) Applicant: **SAMSUNG ELECTRONICS CO., LTD.**, Suwon-si (KR)

(72) Inventors: **Keun-Bae JEON**, Suwon-si (KR); **Kyung Soo PARK**, Yongin-si (KR); **Dae Kuen YANG**, Suwon-si (KR); **Jeong Ho LEE**, Suwon-si (KR)

(73) Assignee: **SAMSUNG ELECTRONICS CO., LTD.**, Suwon-si (KR)

(21) Appl. No.: **15/221,687**

(22) Filed: **Jul. 28, 2016**

(30) **Foreign Application Priority Data**

Jul. 28, 2015 (KR) 10-2015-0106250

Publication Classification

(51) **Int. Cl.**

F21V 8/00 (2006.01)

G02F 1/1333 (2006.01)

(52) **U.S. Cl.**

CPC ***G02B 6/0091*** (2013.01); ***G02B 6/0025*** (2013.01); ***G02B 6/0088*** (2013.01); ***G02F 1/133308*** (2013.01); *G02F 2001/133317* (2013.01)

(57) **ABSTRACT**
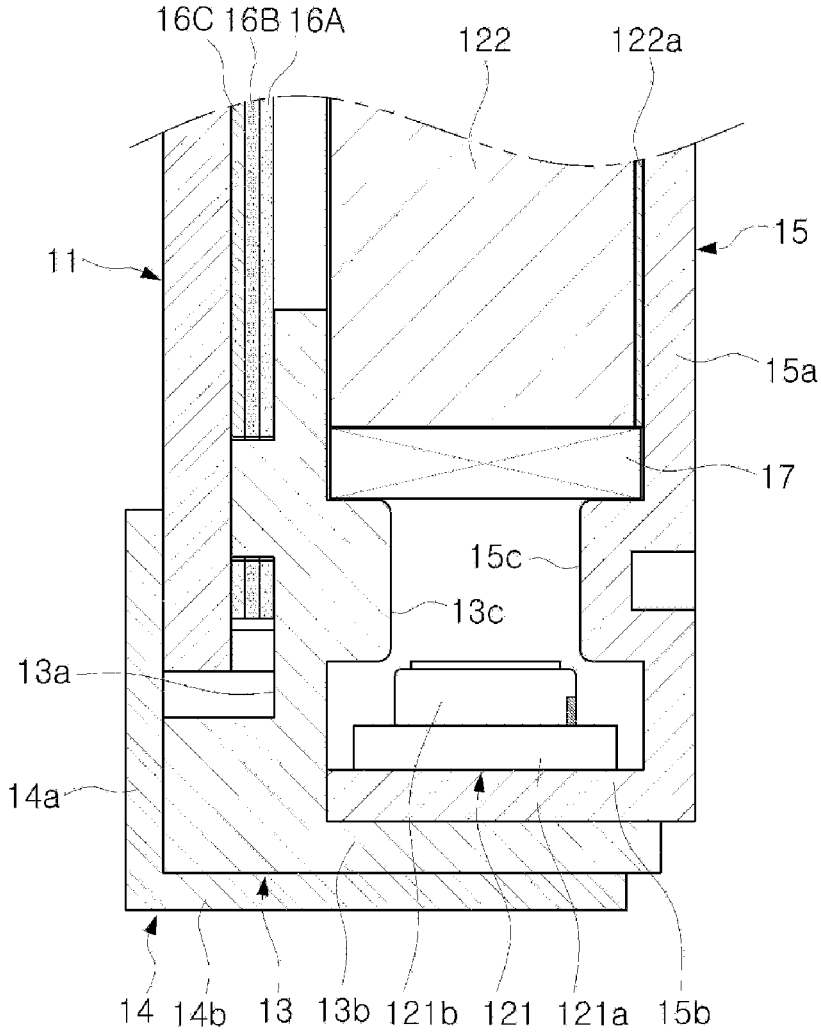
A display apparatus includes a display panel, a light guide plate disposed behind the display panel, a light source disposed to face at least one side surface of the light guide plate, and at least one guide member disposed between the at least one side surface of the light guide plate and the light source, and configured to support at least one of a front part of the at least one side surface of the light guide plate and a back part of the at least one side surface of the light guide plate.