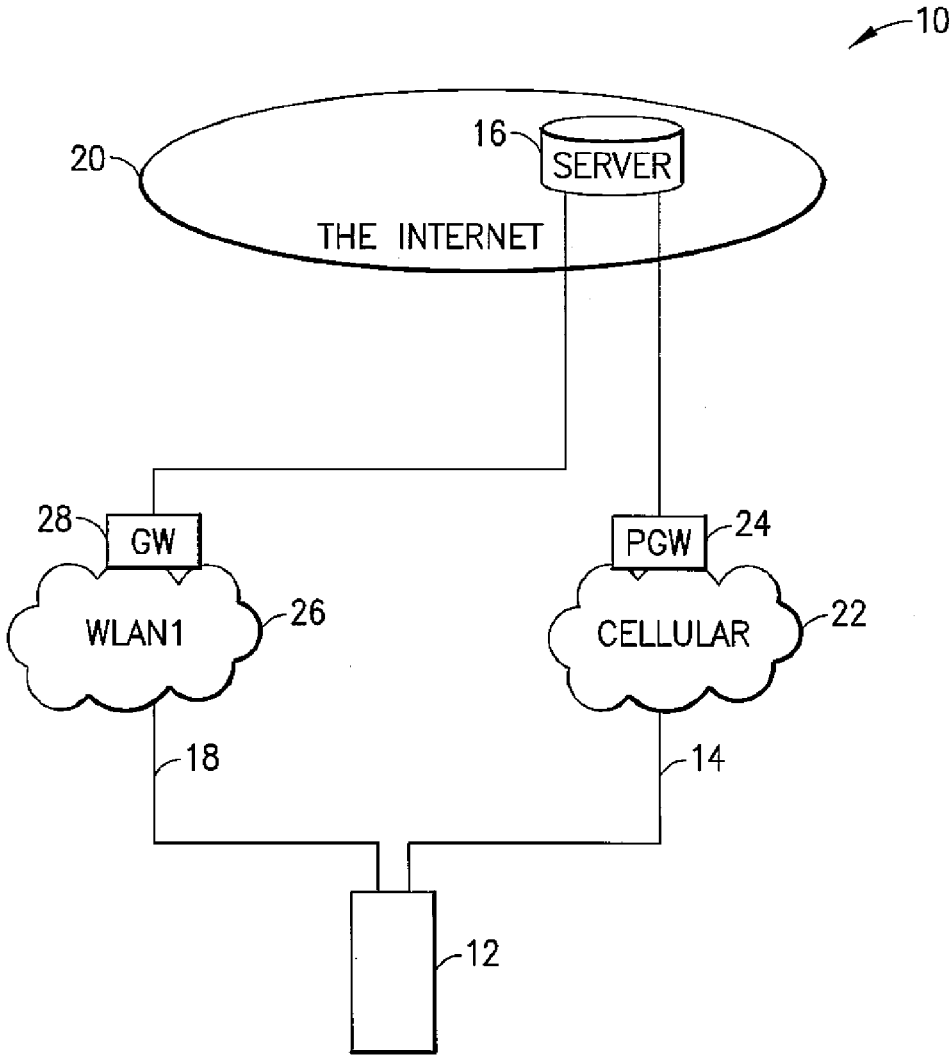
10
20
16
SERVER
THE INTERNET
28
GW
PGW
24
WLAN1
26
CELLULAR
22
18
14
12

FIG. 1