FIG. 13

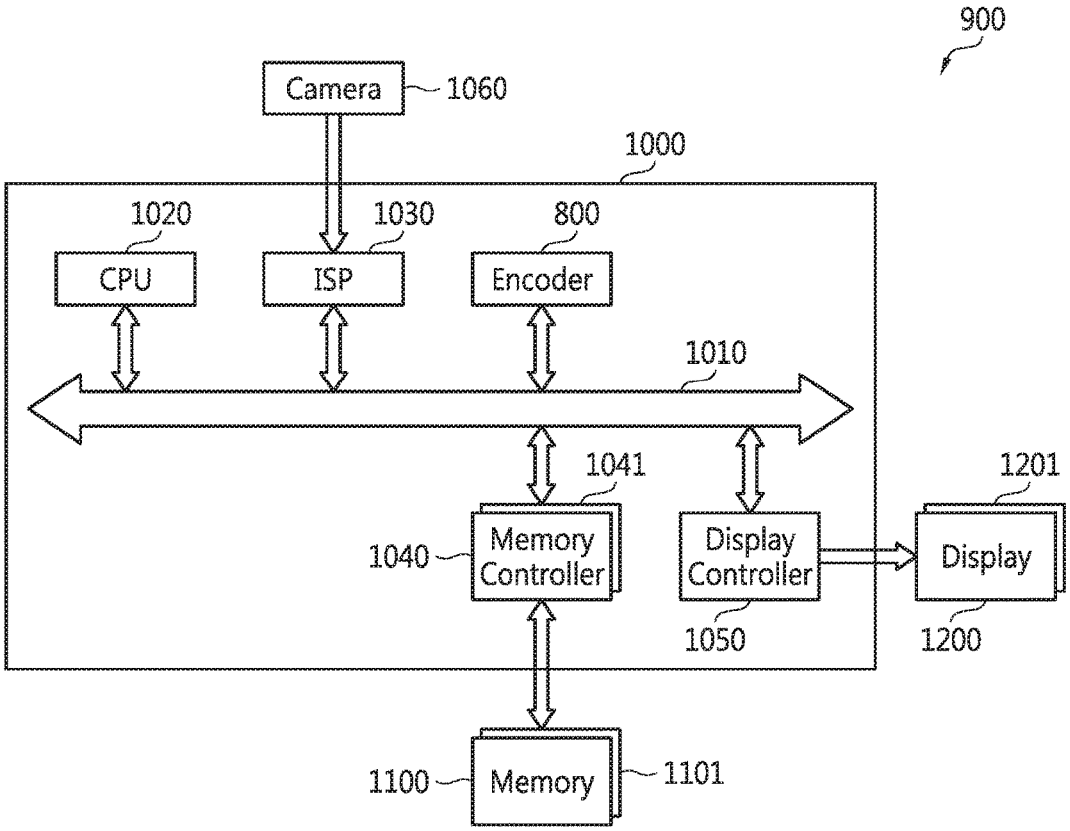
900
Camera
1060
1000
1020
1030
800
CPU
ISP
Encoder
1010
1041
1201
1040
Memory Controller
Display Controller
Display
1050
1200
1100
Memory
1101