FIGURE 3

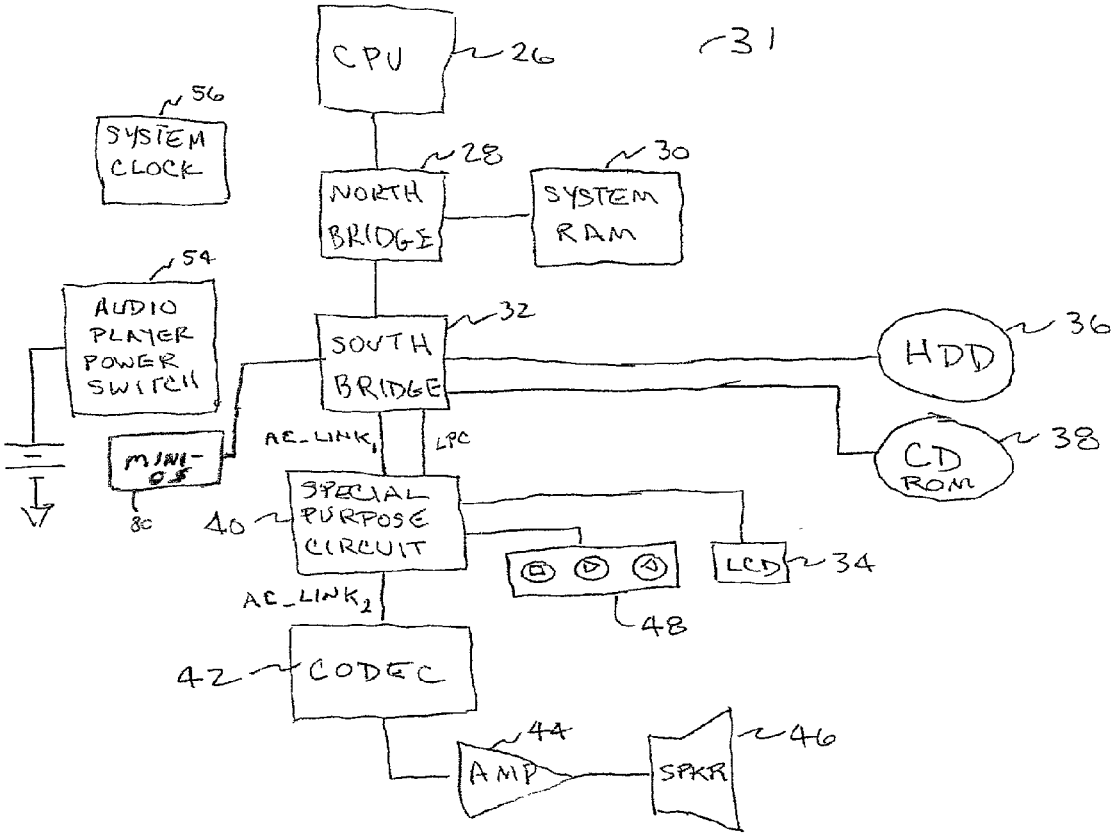
CPU
26
31
56
SYSTEM CLOCK
28
NORTH BRIDGE
30
SYSTEM RAM
54
AUDIO PLAYER POWER SWITCH
32
SOUTH BRIDGE
HDD
36
CD ROM
38
AC_LINK1
LPC
MINI-OS
80
40
SPECIAL PURPOSE CIRCUIT
LCD
34
48
AC_LINK2
42
CODEC
44
AMP
SPKR
46