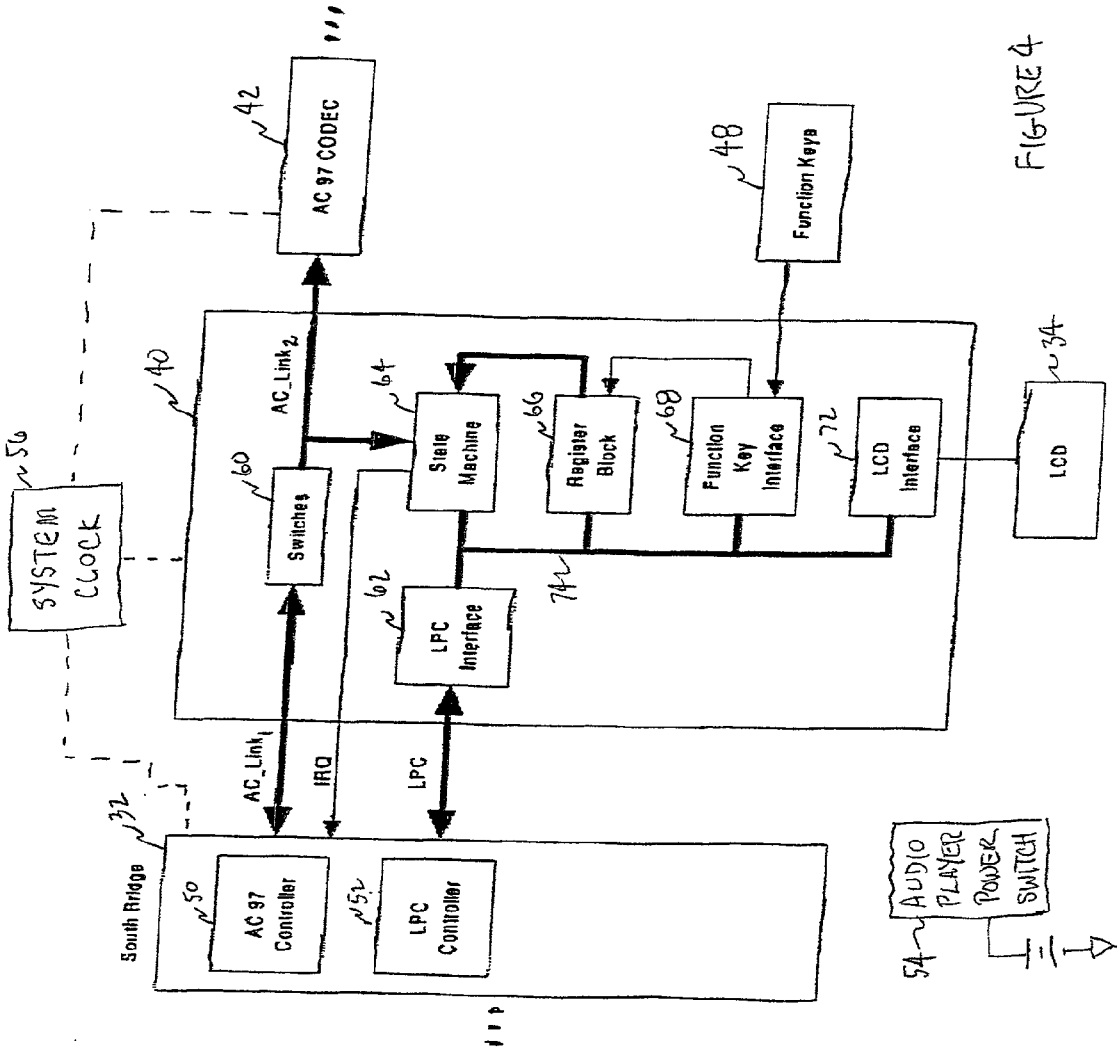
AC 97 CODEC
42
Function Keys
48
40
AC_Link2
64
State Machine
66
Register Block
68
Function Key Interface
72
LCD Interface
34
LCD
56
SYSTEM CLOCK
60
Switches
62
LPC Interface
74
AC_Link1
IRQ
LPC
32
South Bridge
50
AC 97 Controller
52
LPC Controller
54
AUDIO PLAYER POWER SWITCH

FIGURE 4