COPY OF PAPERS
ORIGINALLY FILED

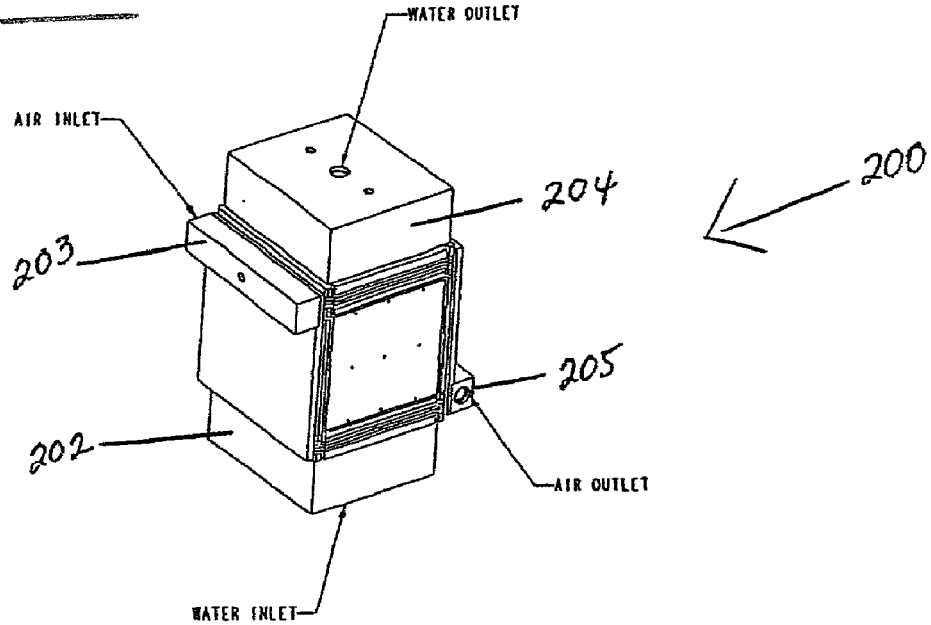

Fig. 10a