US 20080062088A1

(19) United States

(12) Patent Application Publication

(10) Pub. No.: US 2008/0062088 A1

(43) Pub. Date: Mar. 13, 2008

Chang et al.

(54) PIXEL DRIVING CIRCUIT AND OLED DISPLAY APPARATUS AND ELECTRIONIC DEVICE USING THE SAME

(75) Inventors: **Ting-Kuo Chang**, Hsinchu City (TW); **Ching-Wei Lin**, Taoyuan City (TW)

Correspondence Address:
LIU & LIU
444 S. FLOWER STREET, SUITE 1750
LOS ANGELES, CA 90071

(73) Assignee: **TPO Displays Corp.**

(21) Appl. No.: **11/520,915**

(22) Filed: **Sep. 13, 2006**

Publication Classification

(51) **Int. Cl.**
G09G 3/30 (2006.01)

(52) **U.S. Cl.** **345/76**

(57) **ABSTRACT**
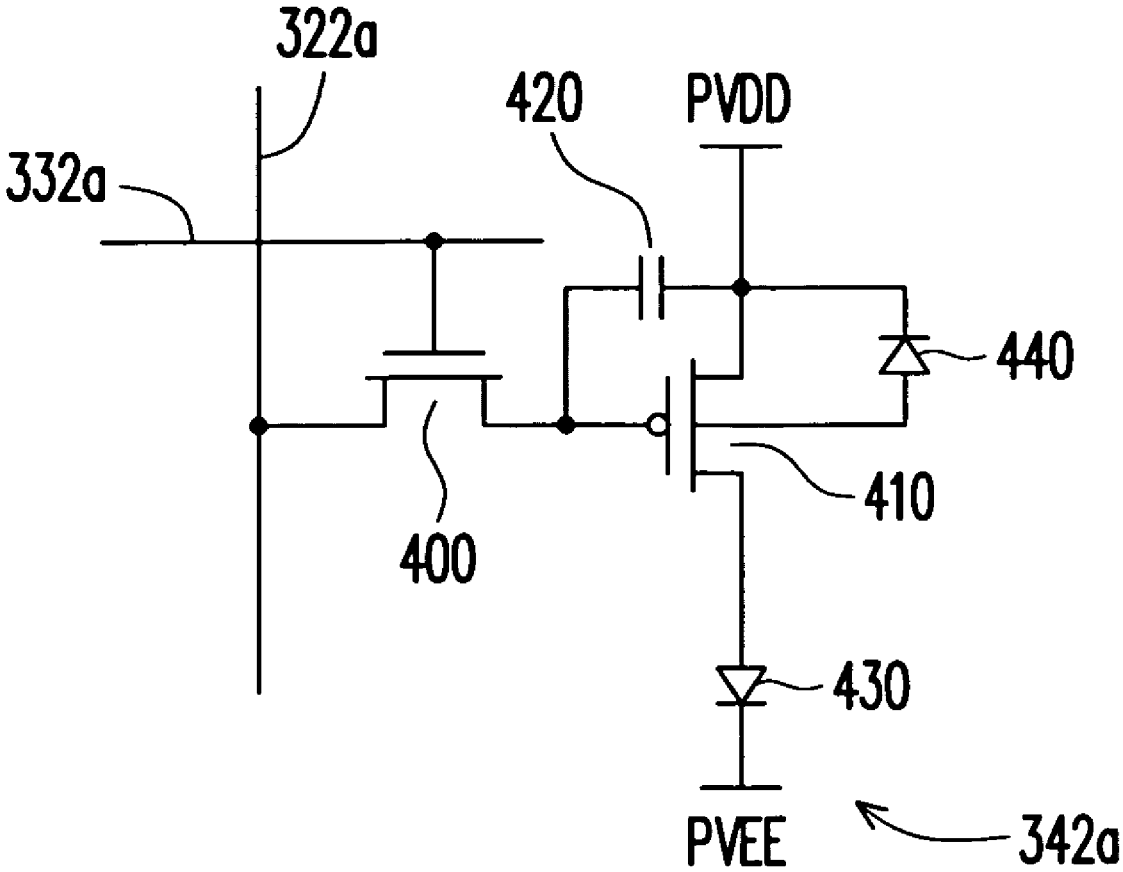
A pixel driving circuit for OLED display apparatus is provided. The pixel driving circuit is adapted to drive an OLED having a first terminal and a second terminal, while the first terminal couples to a first voltage source. The pixel driving circuit comprises a control circuit, a driving transistor and a diode. The control circuit generates a control signal to control an OLED current supplied to the OLED. The driving transistor has a first drain/source terminal, a second drain/source terminal and a gate terminal. The gate terminal receives the control signal to control a channel between the first and second drain/source terminal for adjusting the OLED current flowing through the channel. Further, the diode couples between the channel and a second voltage source.