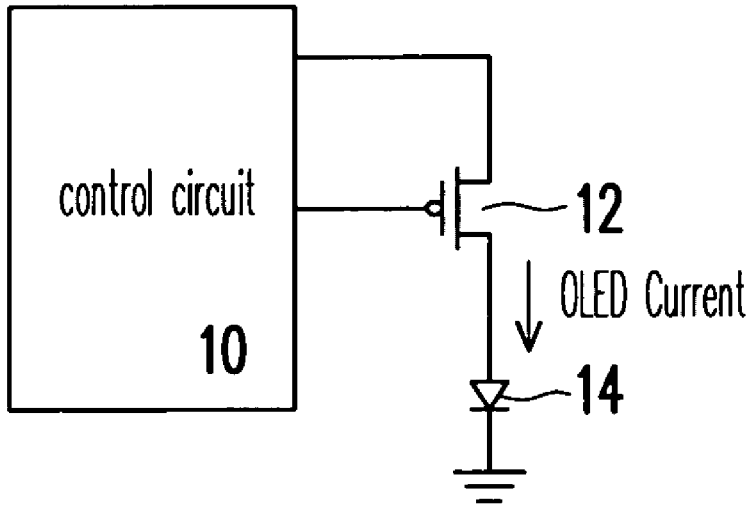

FIG. 1 (PRIOR ART)