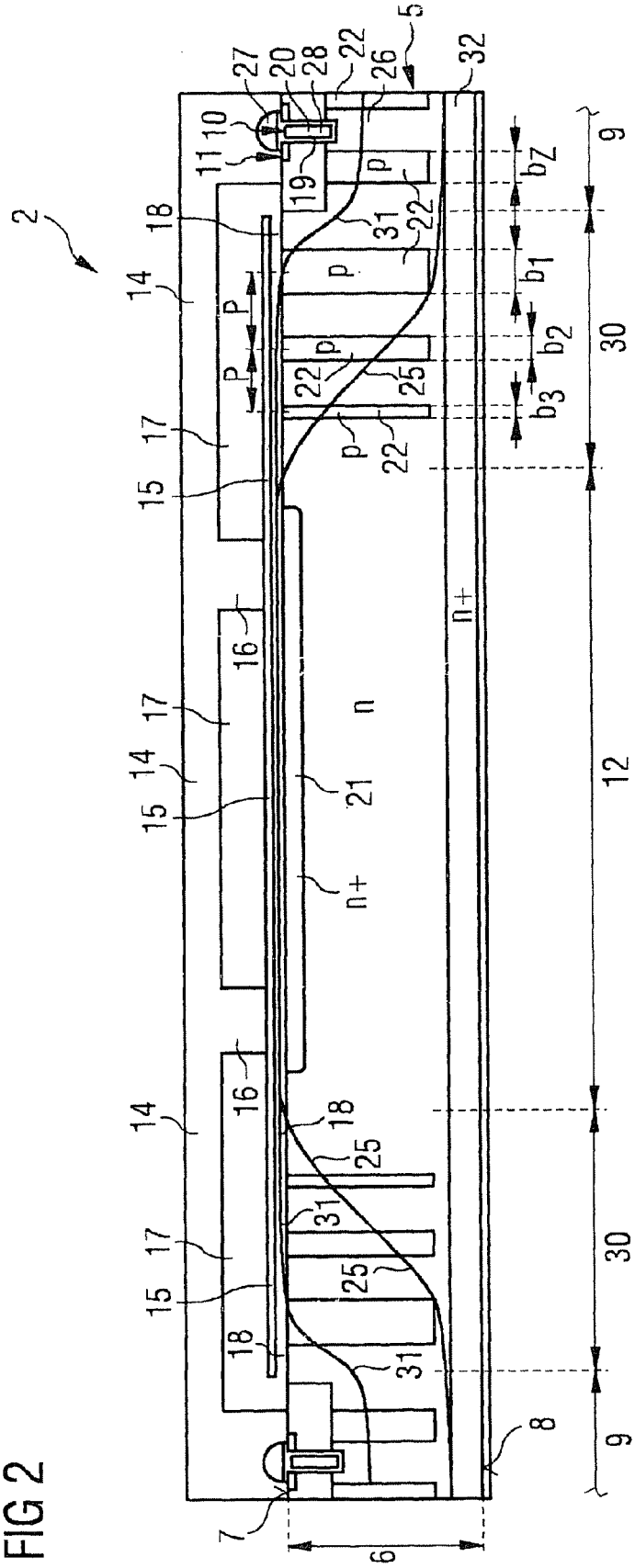
2
5
7
8
9
10
11
12
14
15
16
17
18
19
20
21
22
25
26
27
28
30
31
32
6
n
n+
p
P
b_1
b_2
b_3
b_Z

FIG 2