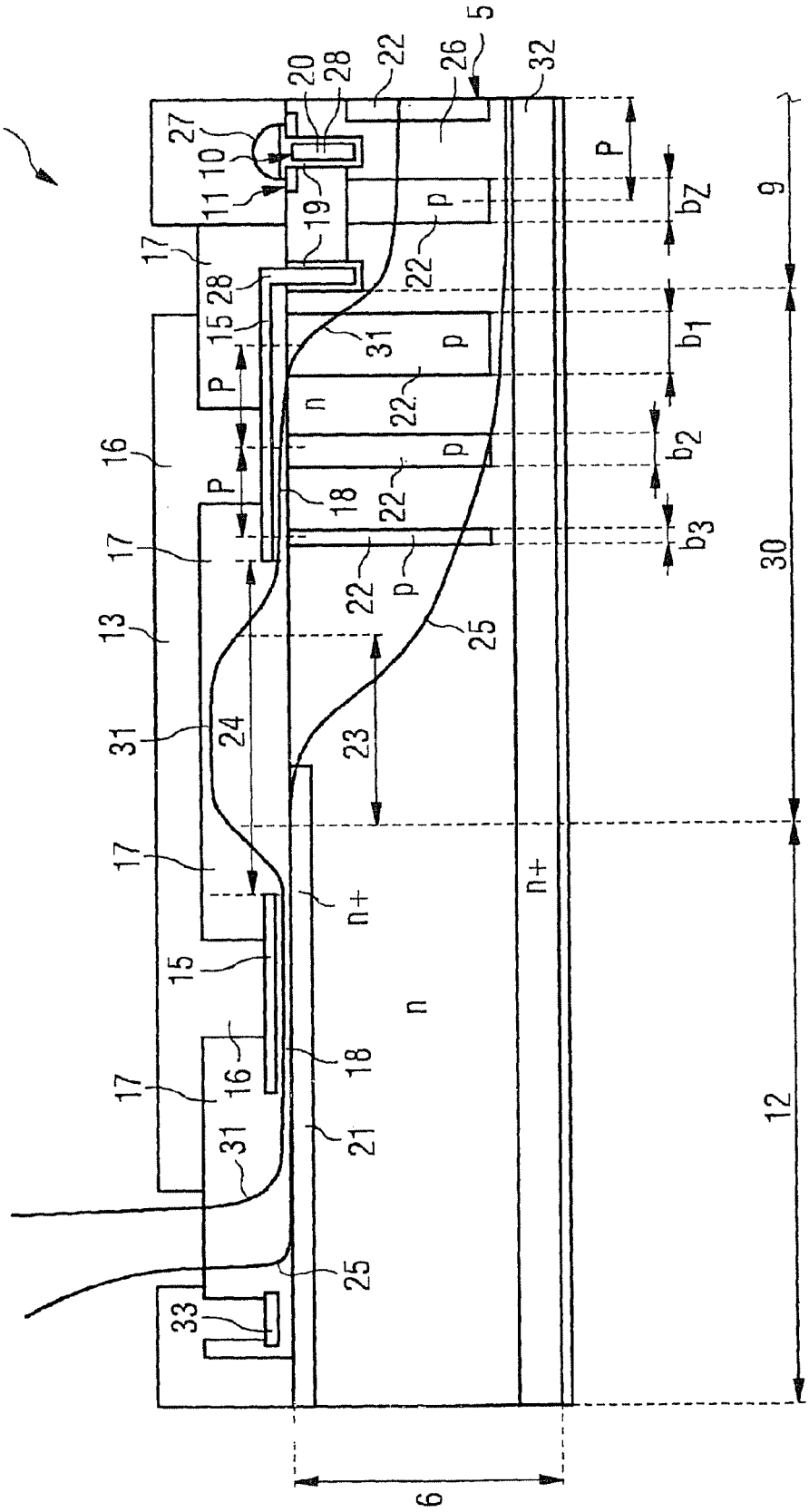
4
5
9
10
11
12
13
15
16
17
18
19
20
21
22
23
24
25
26
27
28
30
31
32
33
6
P
p
n
n+
b1
b2
b3
bZ

FIG 5