FIG. 1

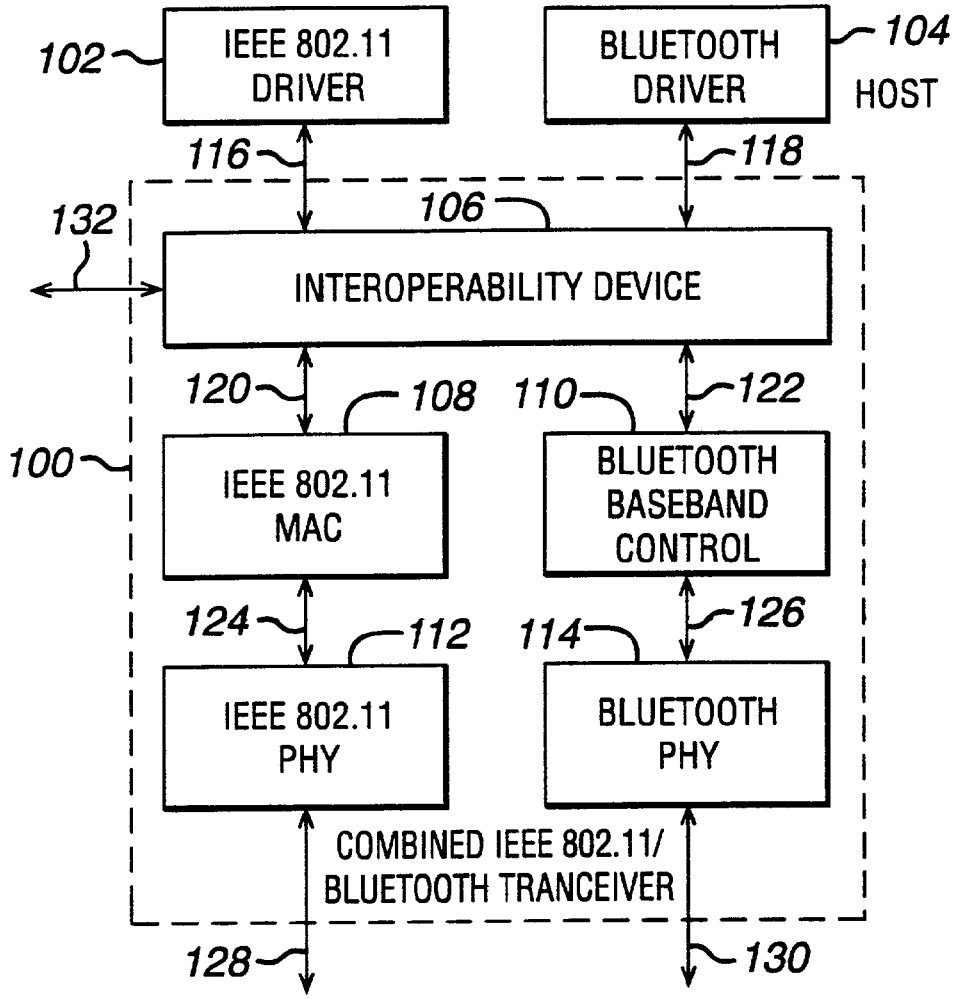
102
IEEE 802.11 DRIVER
BLUETOOTH DRIVER
104
HOST
116
118
106
132
INTEROPERABILITY DEVICE
120
108
110
122
100
IEEE 802.11 MAC
BLUETOOTH BASEBAND CONTROL
124
112
114
126
IEEE 802.11 PHY
BLUETOOTH PHY
COMBINED IEEE 802.11/ BLUETOOTH TRANCEIVER
128
130

FIG. 3

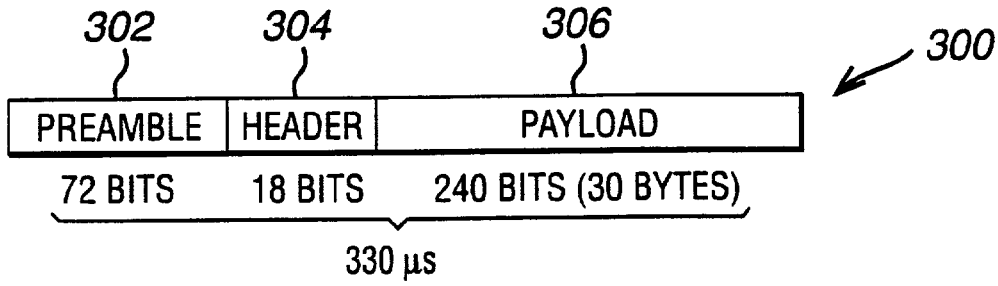
302
304
306
300
PREAMBLE
HEADER
PAYLOAD
72 BITS
18 BITS
240 BITS (30 BYTES)
330 µs