FIG. 4

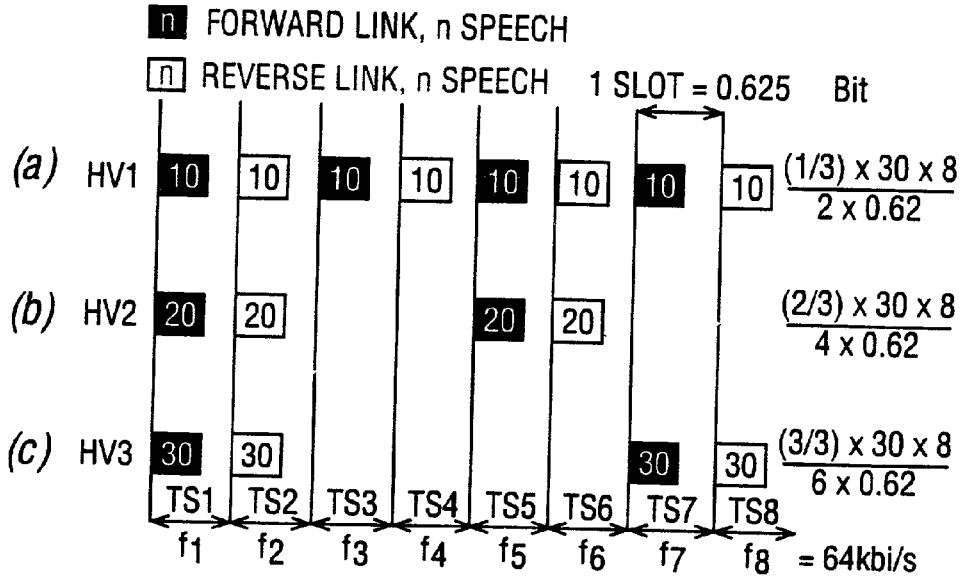
n FORWARD LINK, n SPEECH
n REVERSE LINK, n SPEECH
1 SLOT = 0.625 Bit
(a) HV1
(b) HV2
(c) HV3
10
20
30
(1/3) x 30 x 8 / 2 x 0.62
(2/3) x 30 x 8 / 4 x 0.62
(3/3) x 30 x 8 / 6 x 0.62
TS1 TS2 TS3 TS4 TS5 TS6 TS7 TS8
f1 f2 f3 f4 f5 f6 f7 f8 = 64kbi/s

FIG. 6

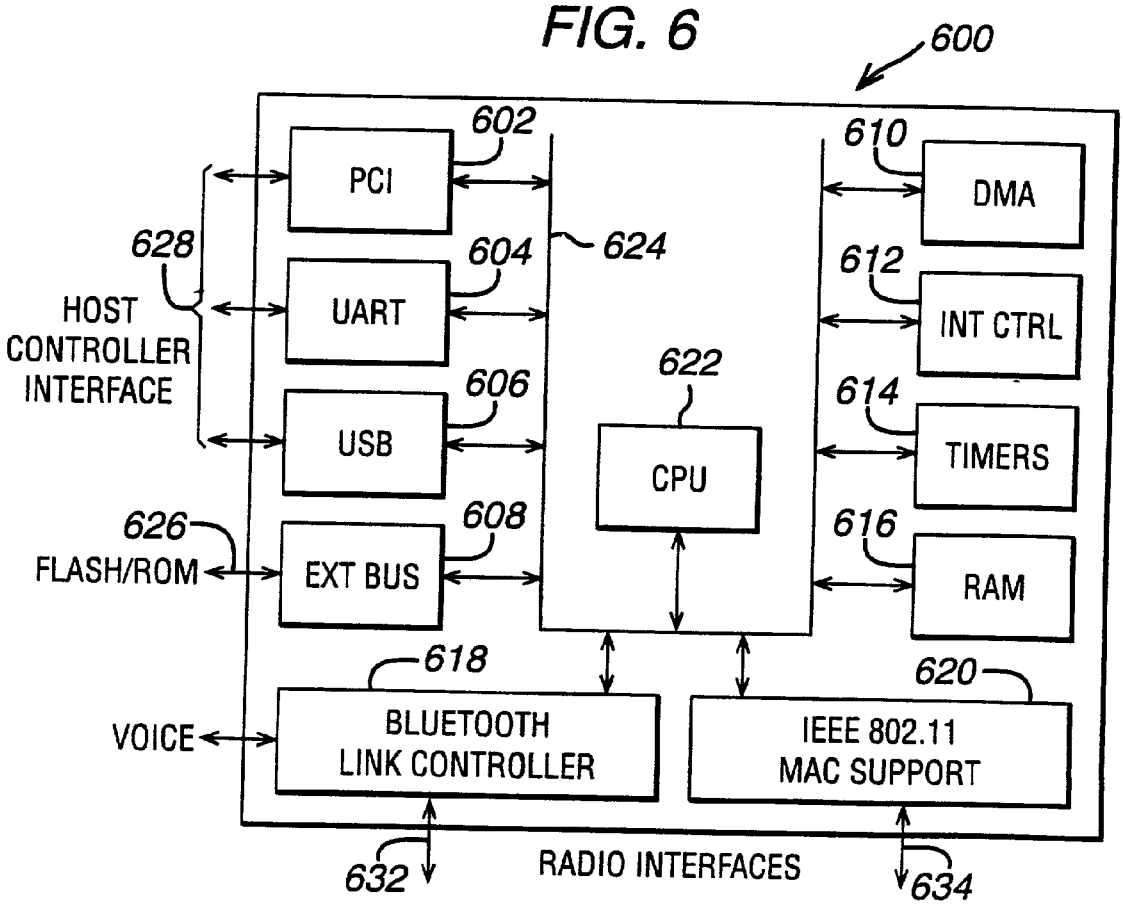
600
PCI
602
UART
604
USB
606
EXT BUS
608
628
HOST CONTROLLER INTERFACE
626
FLASH/ROM
624
622
CPU
DMA
610
INT CTRL
612
TIMERS
614
RAM
616
618
BLUETOOTH LINK CONTROLLER
620
IEEE 802.11 MAC SUPPORT
VOICE
632
RADIO INTERFACES
634