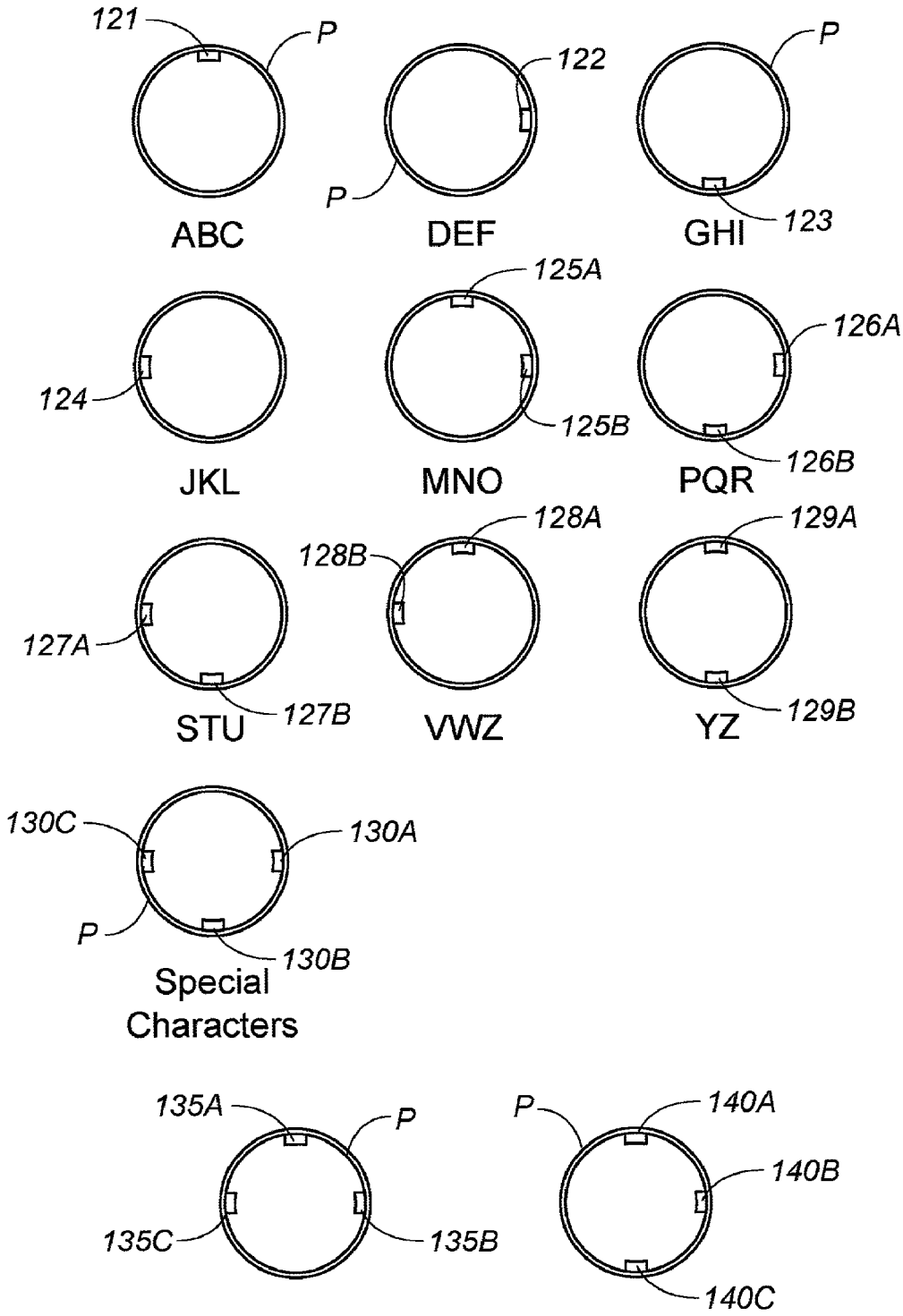

Alpha System

FIG. 4