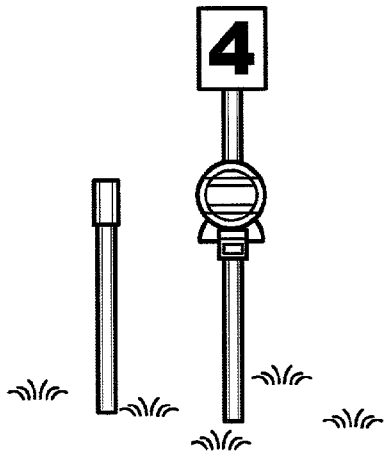
4

FIG. 6A

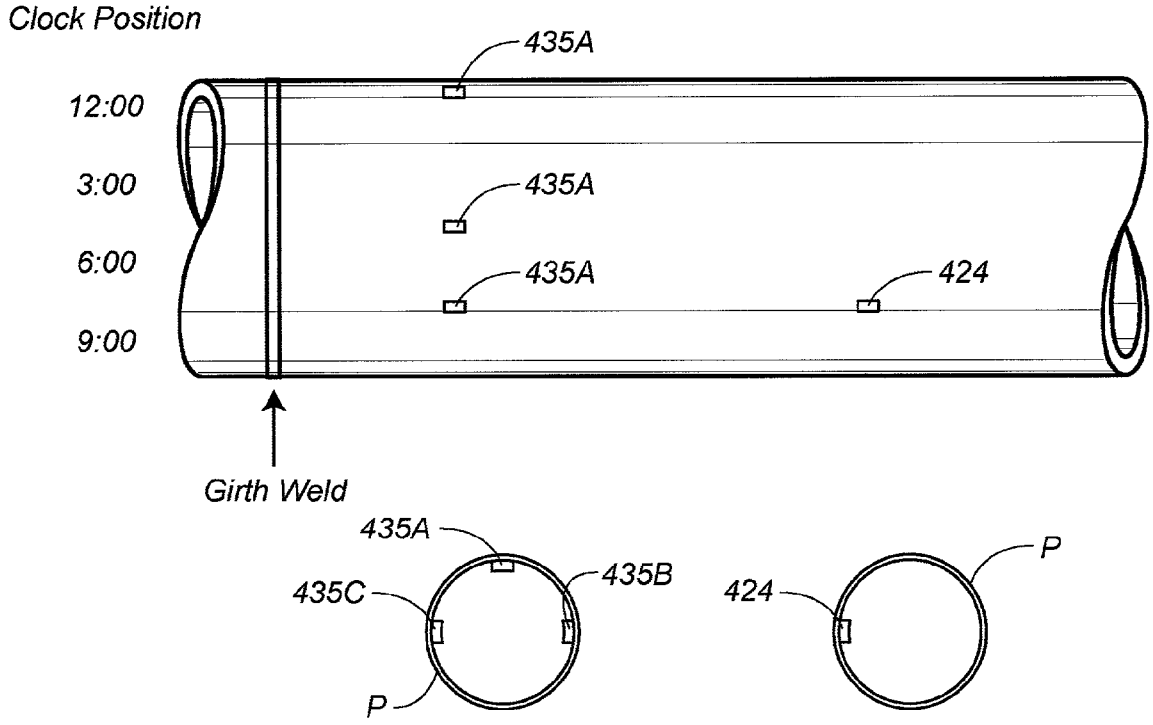
Clock Position
12:00
3:00
6:00
9:00
435A
435A
435A
424
Girth Weld
435A
435B
435C
P
424
P

FIG. 6B