FIG.5

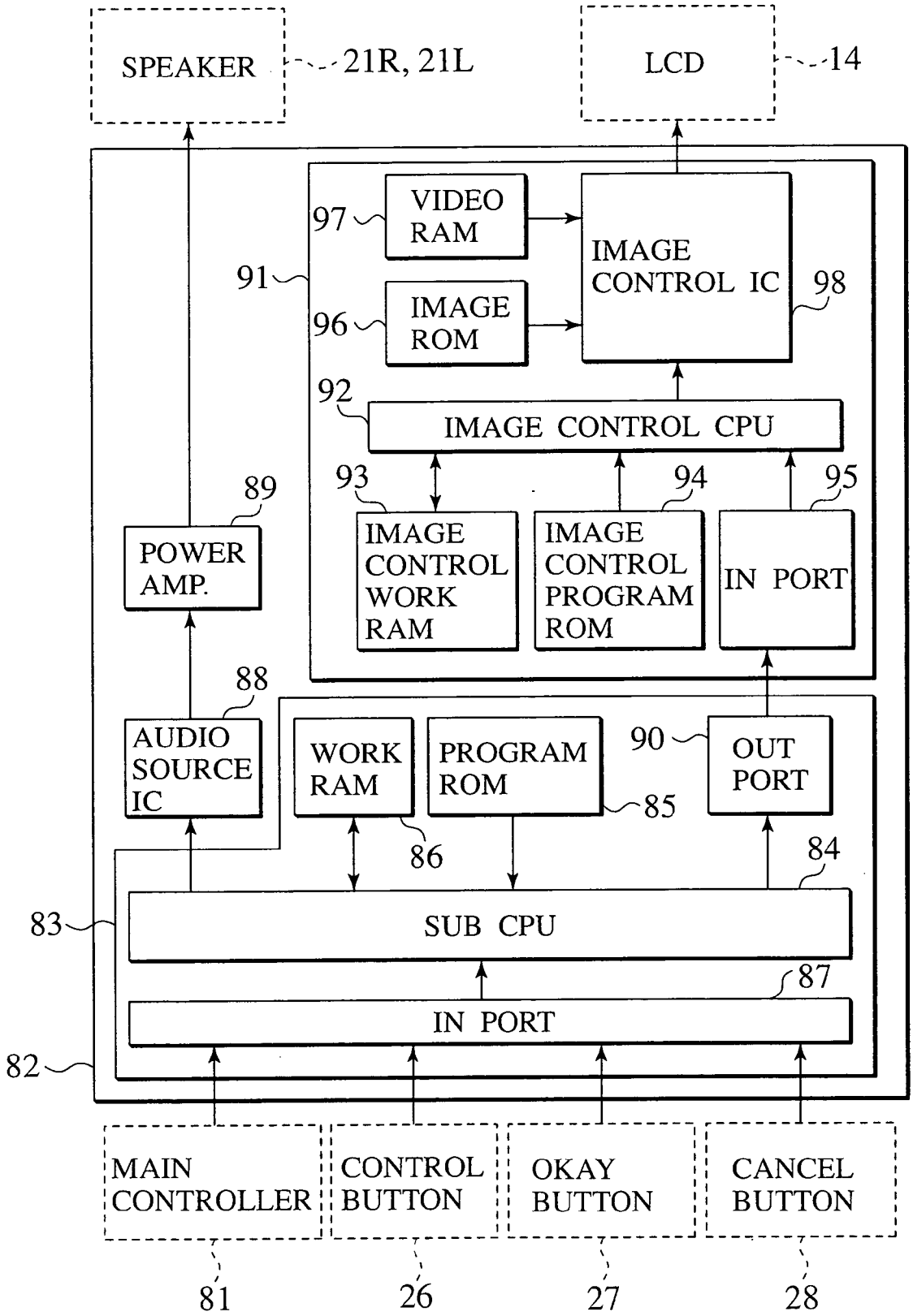
SPEAKER
21R, 21L
LCD
14
VIDEO RAM
97
IMAGE CONTROL IC
98
91
IMAGE ROM
96
92
IMAGE CONTROL CPU
93
94
95
89
POWER AMP.
IMAGE CONTROL WORK RAM
IMAGE CONTROL PROGRAM ROM
IN PORT
88
AUDIO SOURCE IC
WORK RAM
PROGRAM ROM
90
OUT PORT
85
86
84
83
SUB CPU
87
IN PORT
82
MAIN CONTROLLER
CONTROL BUTTON
OKAY BUTTON
CANCEL BUTTON
81
26
27
28