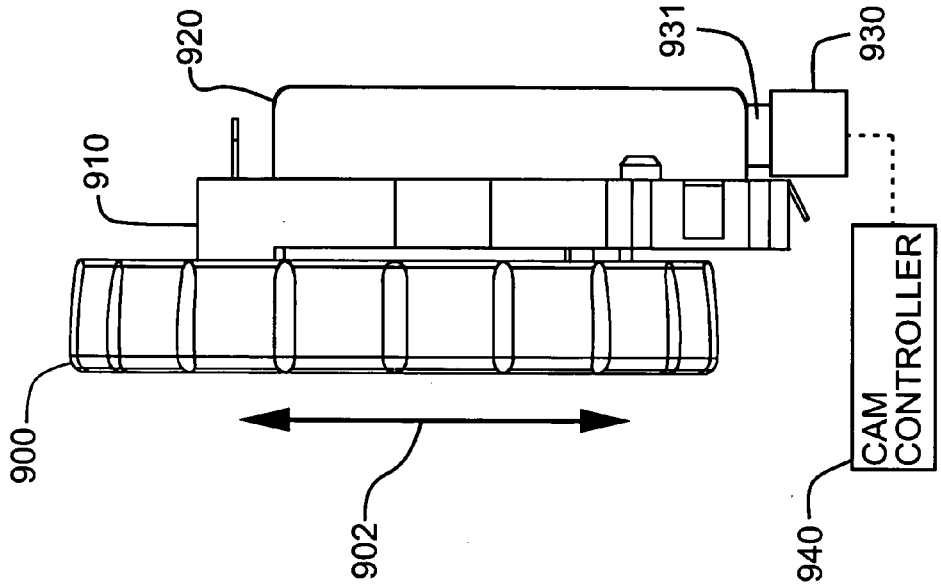

FIG.9B

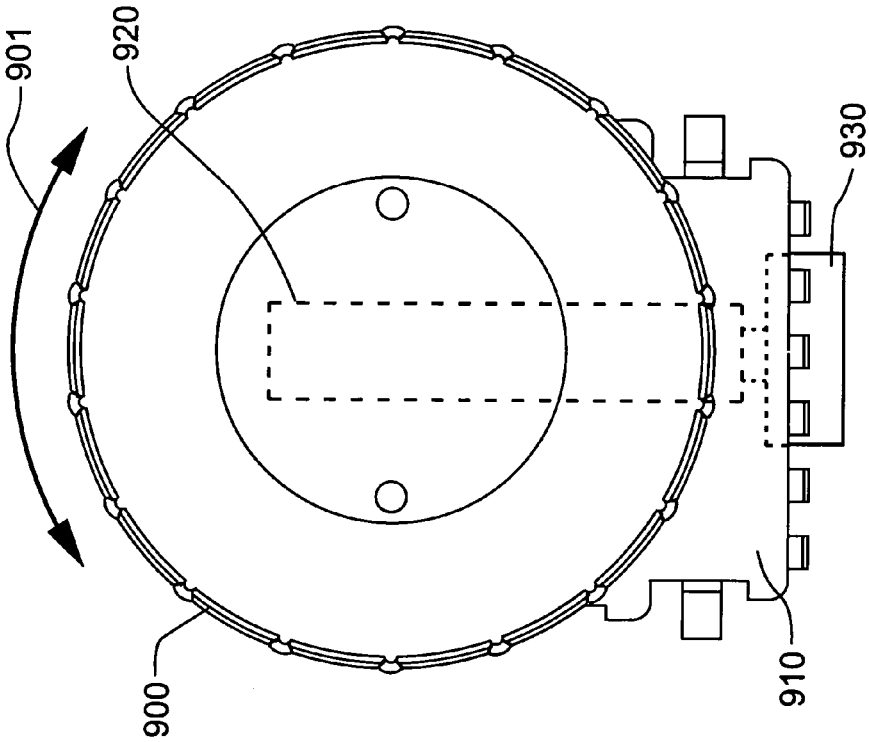

FIG.9A