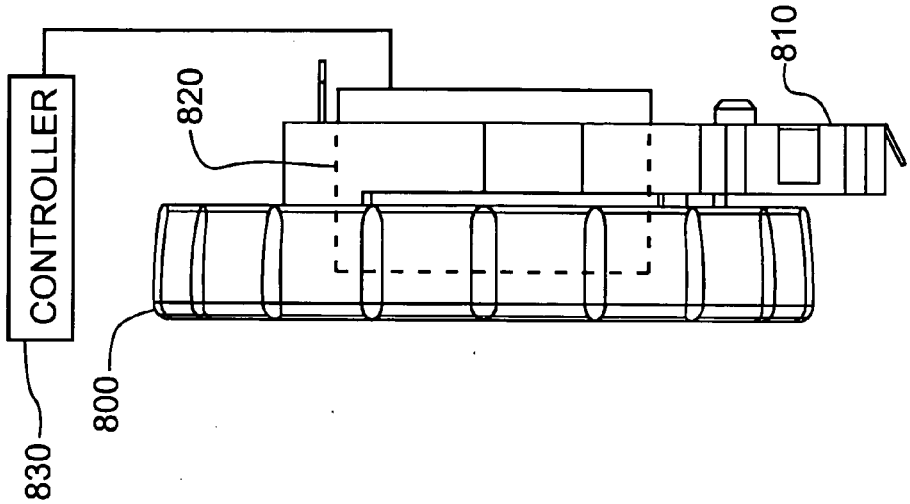

FIG.8B

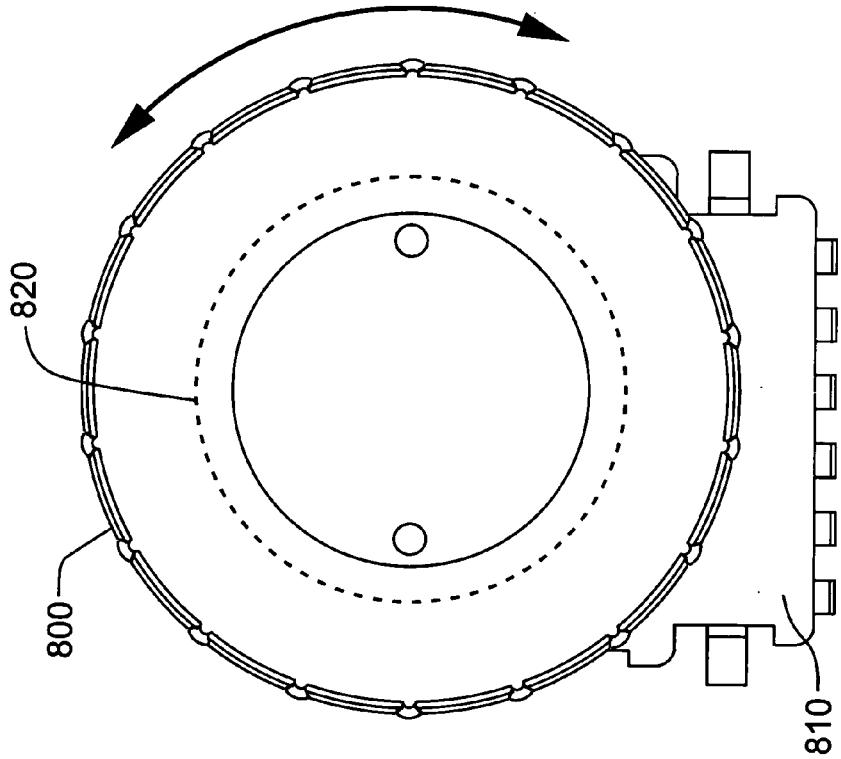

FIG.8A