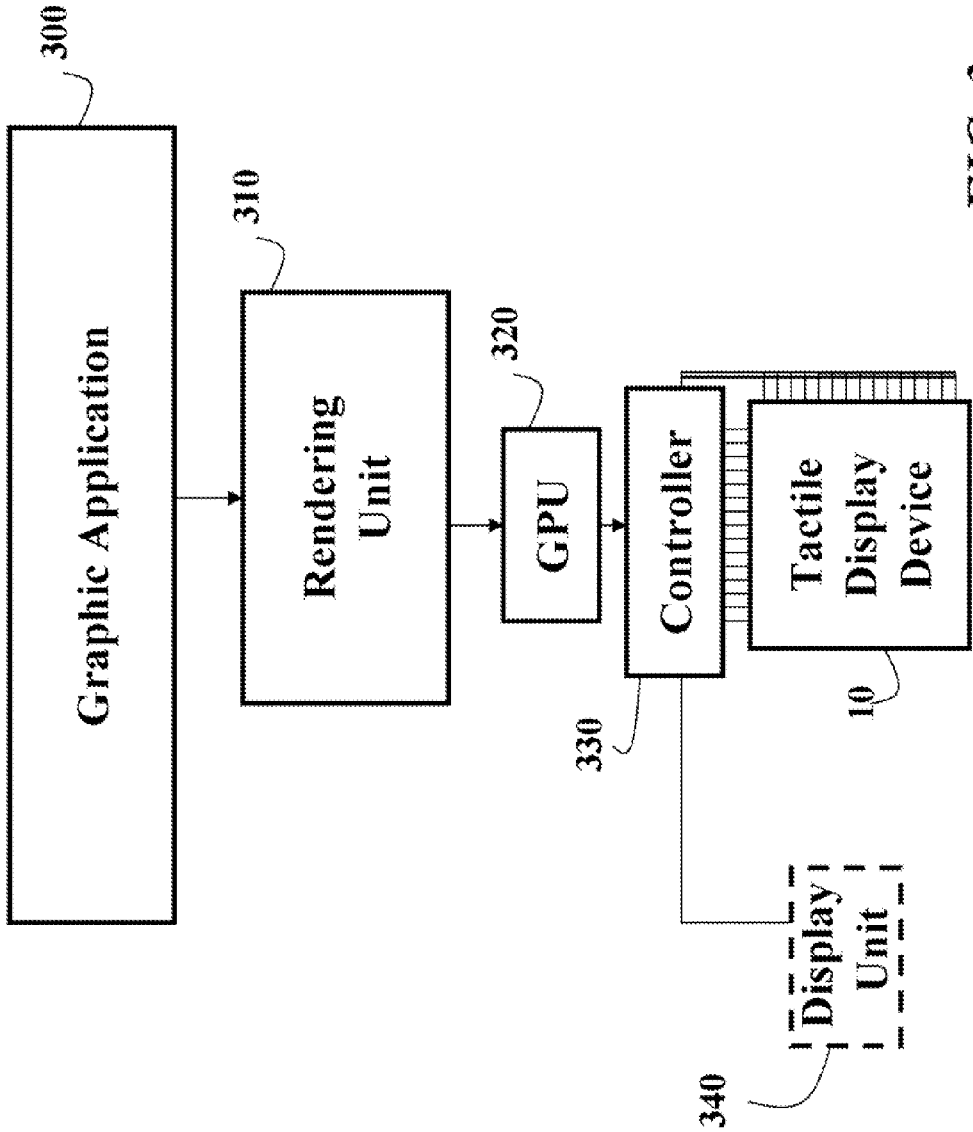
300
Graphic Application
310
Rendering Unit
320
GPU
330
Controller
Tactile Display Device
10
Display Unit
340

FIG. 3