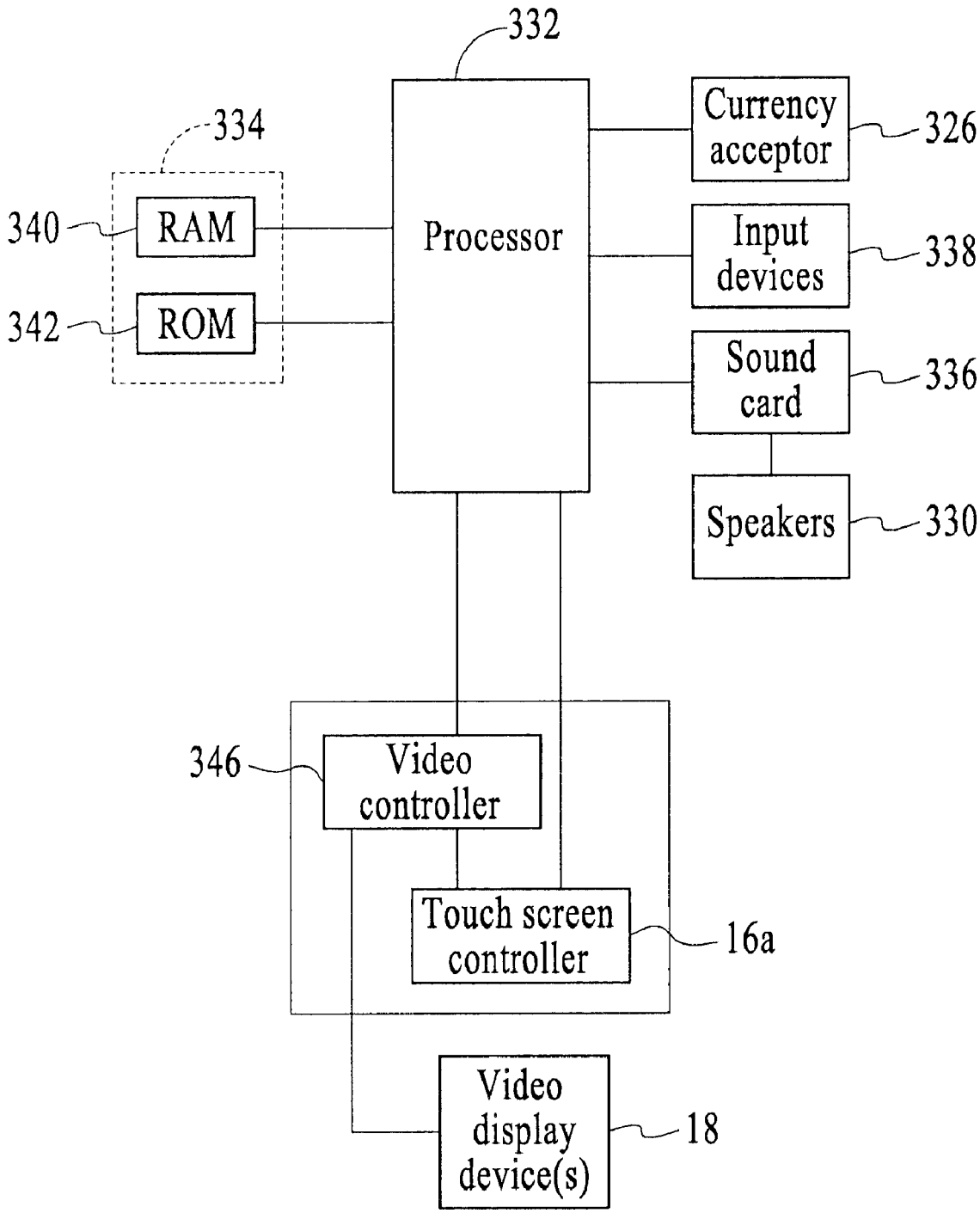
332
334
340
RAM
342
ROM
Processor
Currency acceptor
326
Input devices
338
Sound card
336
Speakers
330
346
Video controller
Touch screen controller
16a
Video display device(s)
18

FIG.6