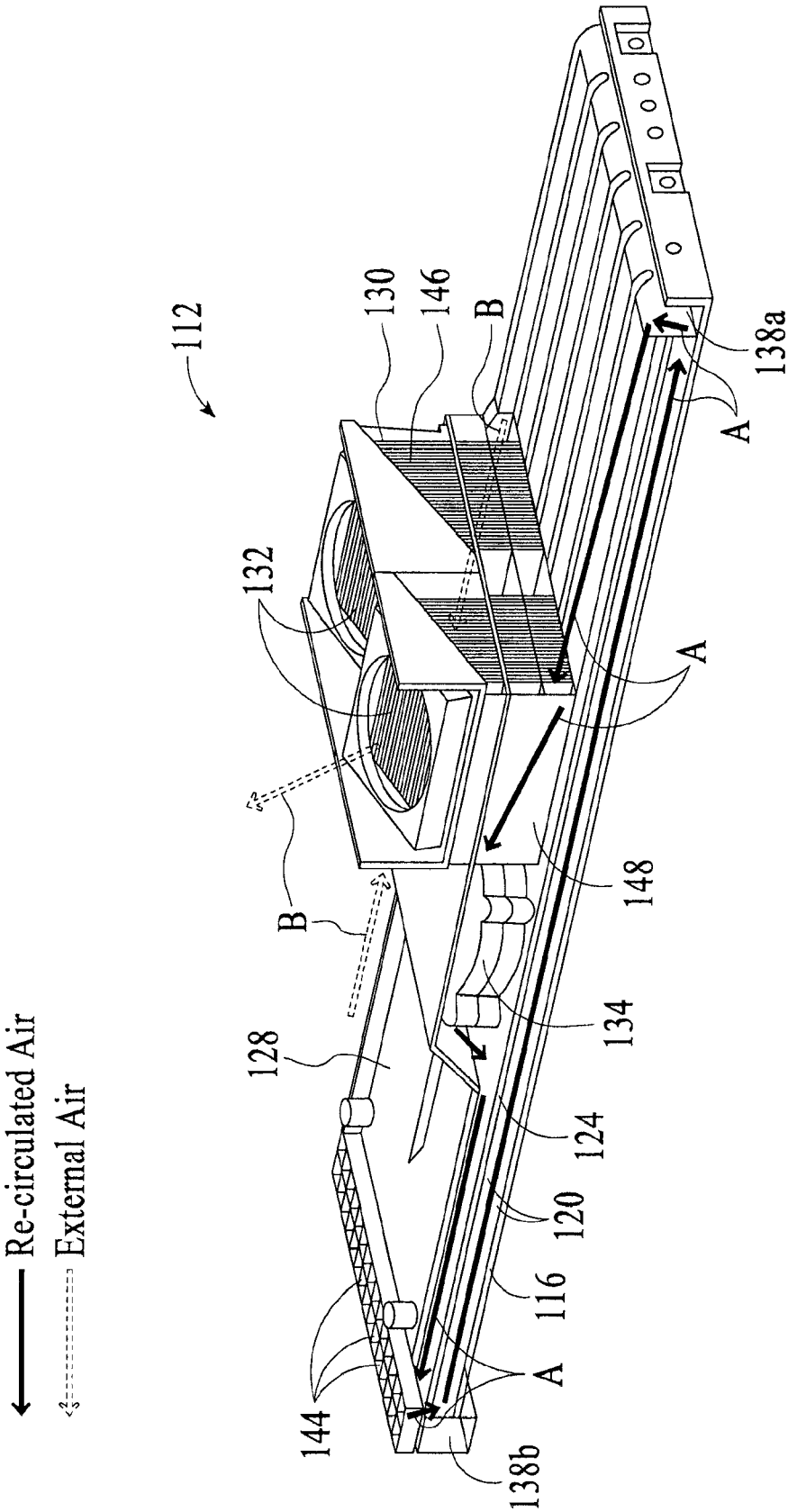
112
130
146
B
138a
A
132
A
148
B
134
128
124
120
116
A
144
138b
Re-circulated Air
External Air

FIG.1D