US 20100276589A1

(19) United States

(12) Patent Application Publication

McKay et al.

(10) Pub. No.: US 2010/0276589 A1

(43) Pub. Date: Nov. 4, 2010

(54) **ATMOSPHERIC PRESSURE ION SOURCE MOVING TRANSPORT INTERFACE FOR A MASS SPECTROMETER**

(75) Inventors: **Richard Garrett McKay**, Hockessin, DE (US); **Charles Nehemiah McEwen**, Newark, DE (US)

Correspondence Address:
M&M Mass Spec. Consulting LLC
P.O. Box 191
Hockessin, DE 19707 (US)

(73) Assignee: **M&M MASS SPEC CONSULTING LLC**, HOCKESSIN, DE (US)

(21) Appl. No.: **12/387,590**

(22) Filed: **May 4, 2009**

Publication Classification

(51) **Int. Cl.**
H01J 49/00 (2006.01)
G01J 3/10 (2006.01)

(52) **U.S. Cl.** ..... **250/288**; 250/504 R

(57) **ABSTRACT**
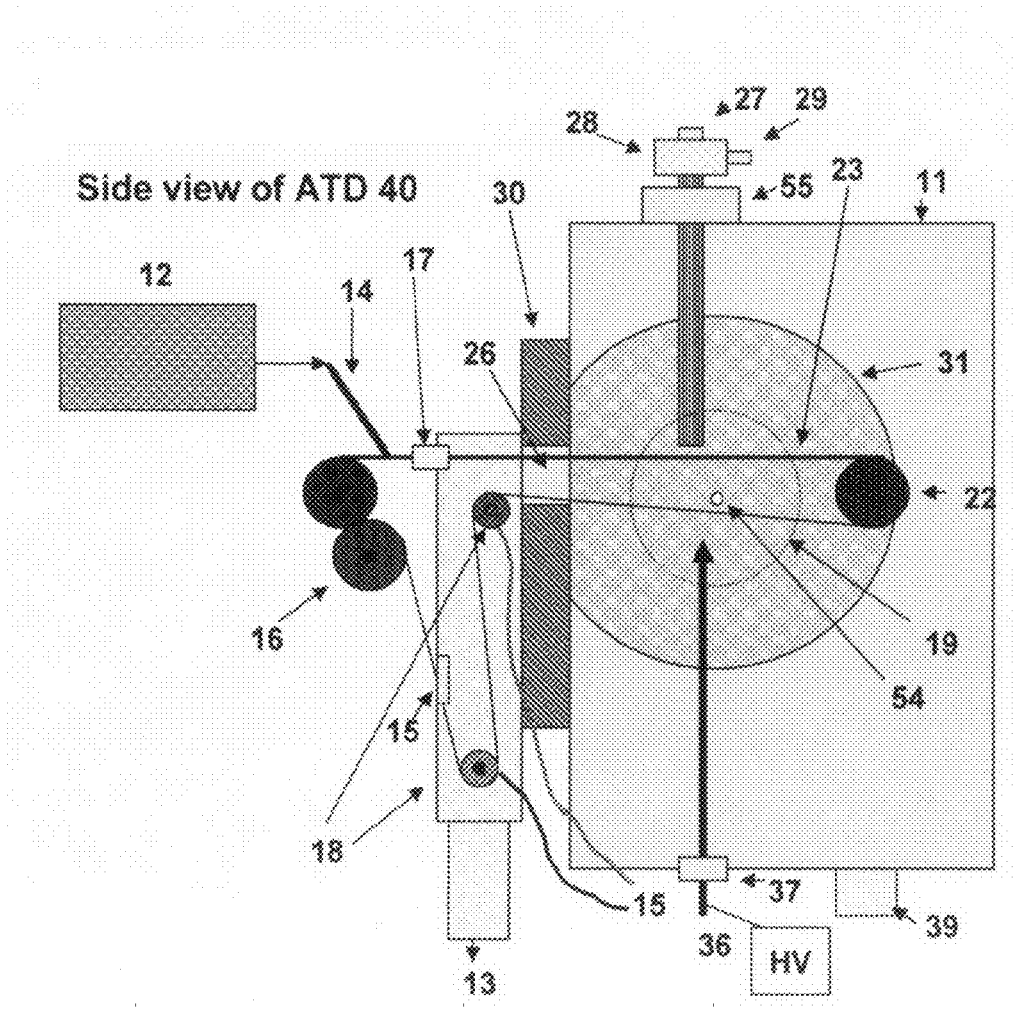
An atmospheric pressure (AP) mass spectrometry ion source able to ionize analytes in liquid effluents from interfaced liquid separation techniques and from individual containers, as in microtiter plates, by direct introduction of the analyte into the ion source using a moving ribbon, wire, or belt with vaporization of the analyte and subsequent ionization using an electric discharge or photoionization. The AP source may also incorporate atmospheric pressure chemical ionization (APCI), photoionization (APPI) and/or electrospray ionization (ESI), techniques that are commercially available. The source facilitates ionization of volatile and semivolatile compounds by applying heat from a gas stream to vaporize analyte entering the ionization region on a moving transport device. Solvent removal prior to sample entering the ionization region enables ionization of a wider range of compounds than liquid introduction APCI or APPI. The source is also capable of ionizing non-volatile compounds in solution by electrospray ionization, thus the combination provides almost universal ionization for organic compounds.