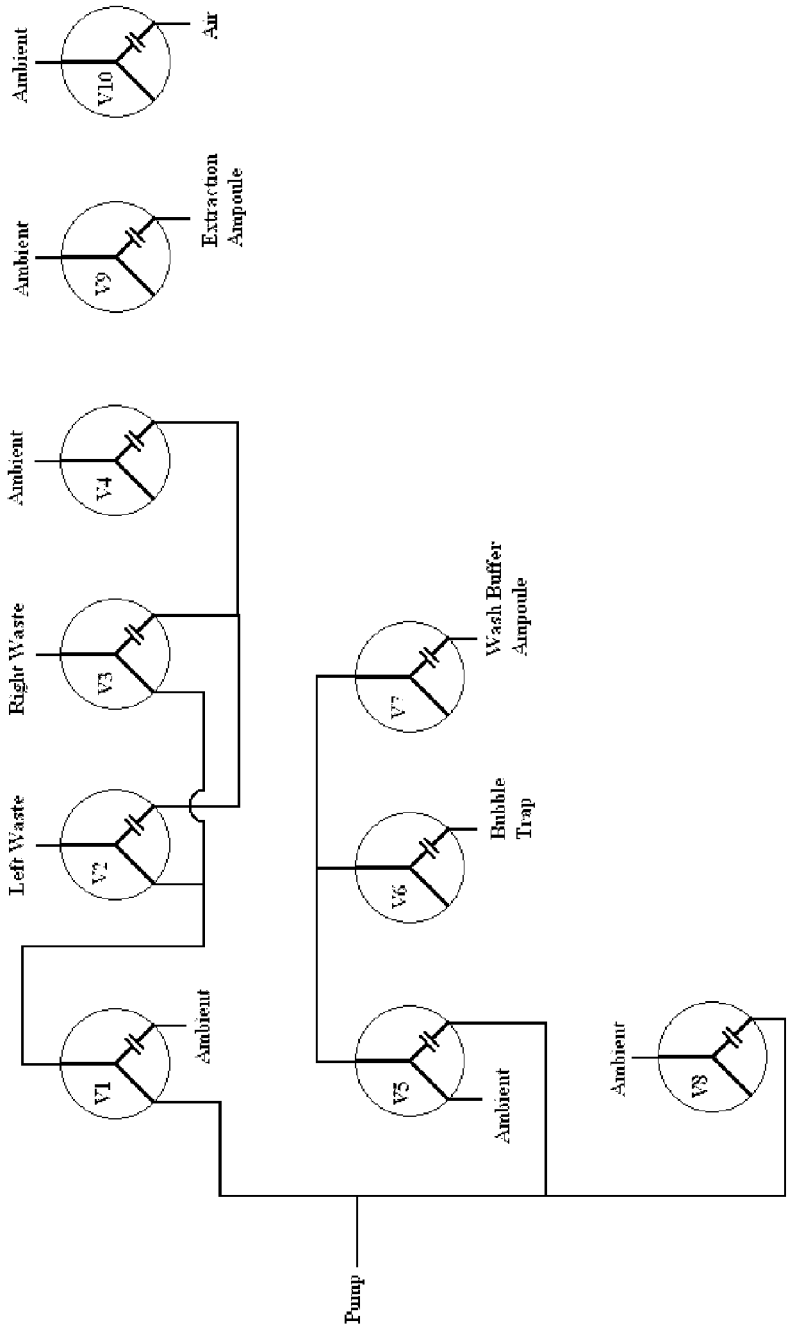
Ambient
V10
Air
Ambient
V9
Extraction Ampoule
Ambient
V4
Right Waste
V3
Left Waste
V2
V1
Ambient
V7
Wash Buffer Ampoule
V6
Bubble Trap
V5
Ambient
Ambient
V8
Pump

Fig. 37(a)