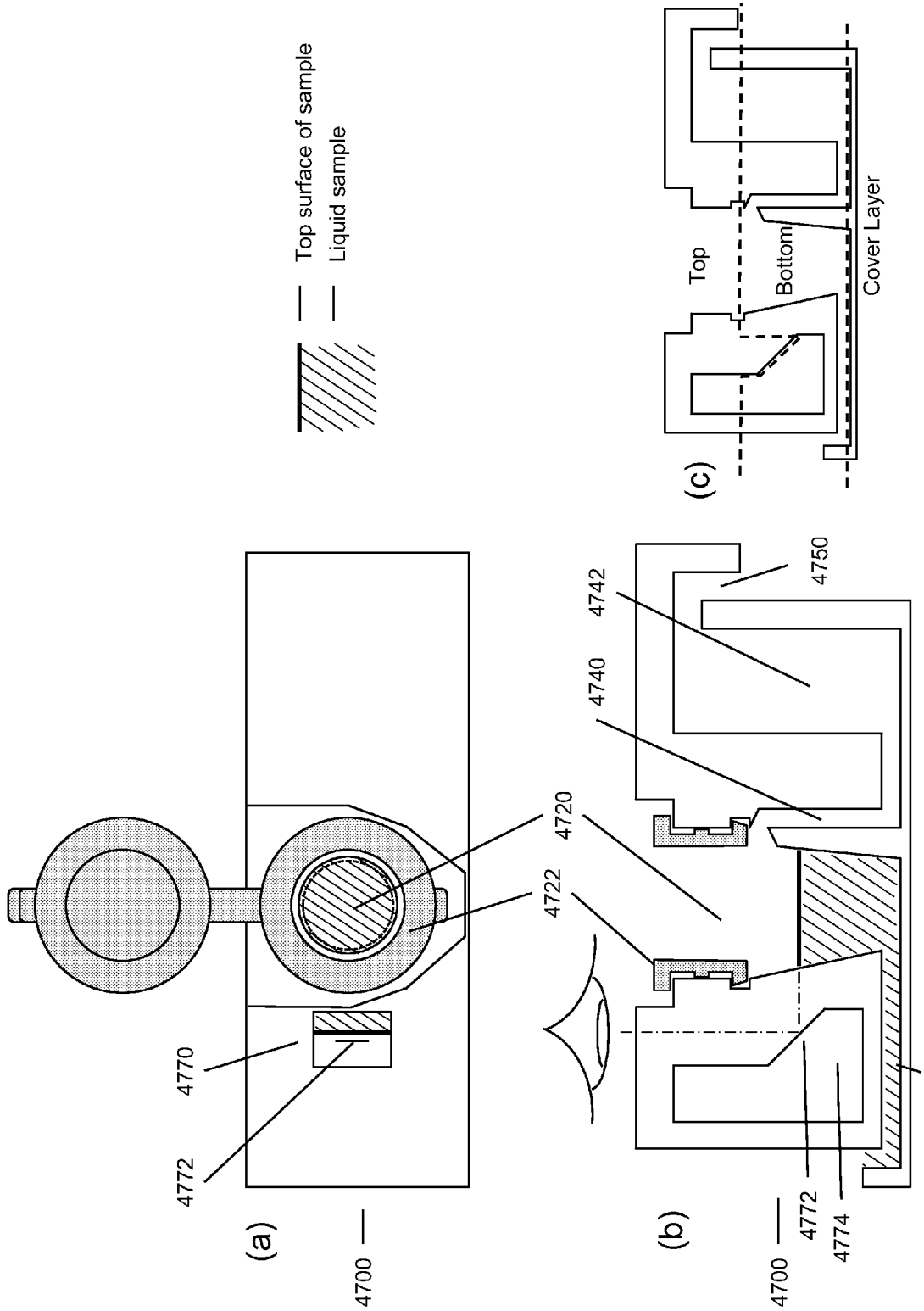
Top surface of sample
Liquid sample
(a)
4700
4772
4770
4720
4722
(b)
4700
4772
4774
4730
4742
4740
4750
(c)
Top
Bottom
Cover Layer

Fig. 47