FIG. 10

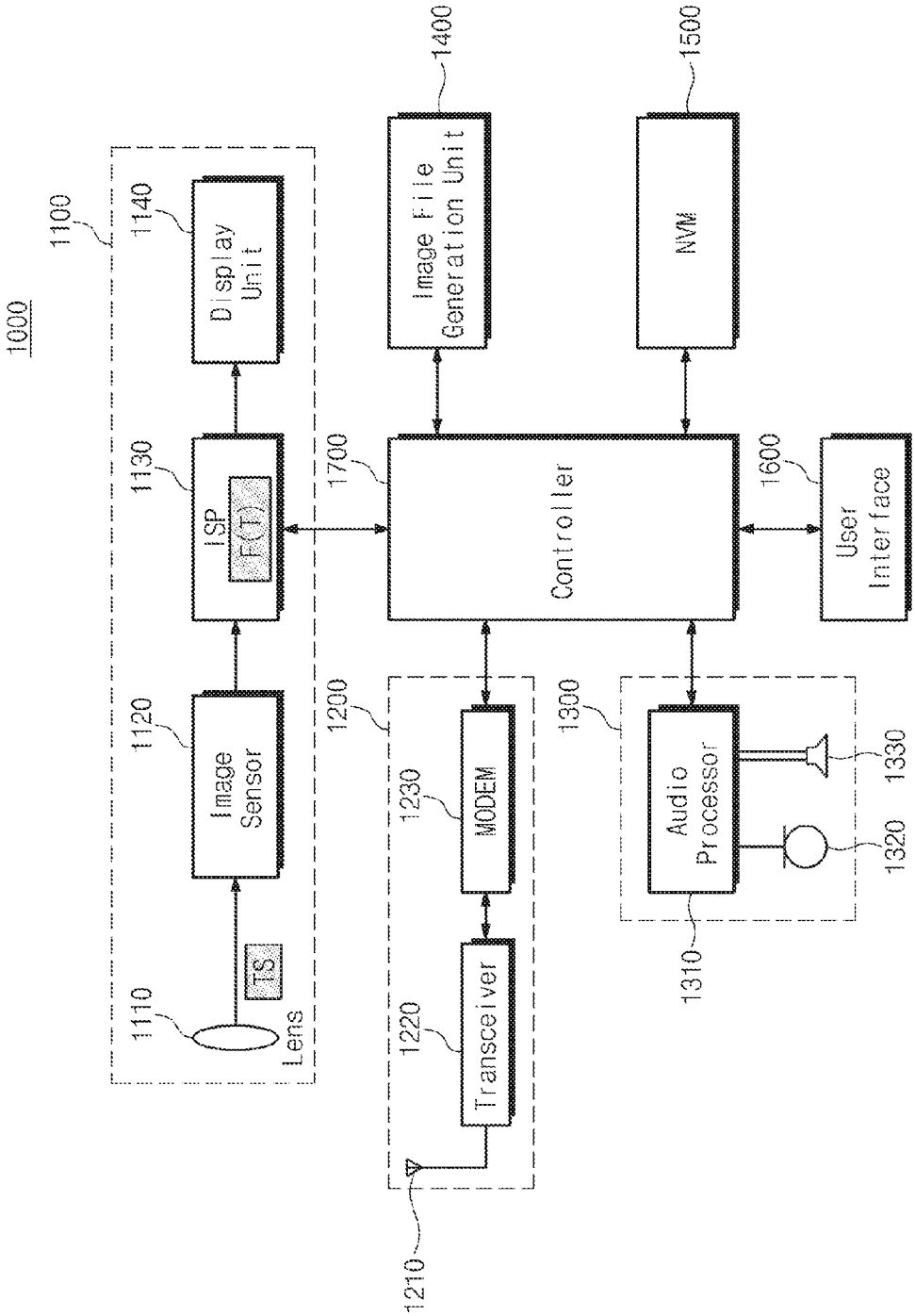
1000
1100
1110
Lens
TS
1120
Image Sensor
1130
ISP
F(T)
1140
Display Unit
1200
1210
1220
Transceiver
1230
MODEM
1300
1310
Audio Processor
1320
1330
1400
Image File Generation Unit
1500
NVM
1600
User Interface
1700
Controller