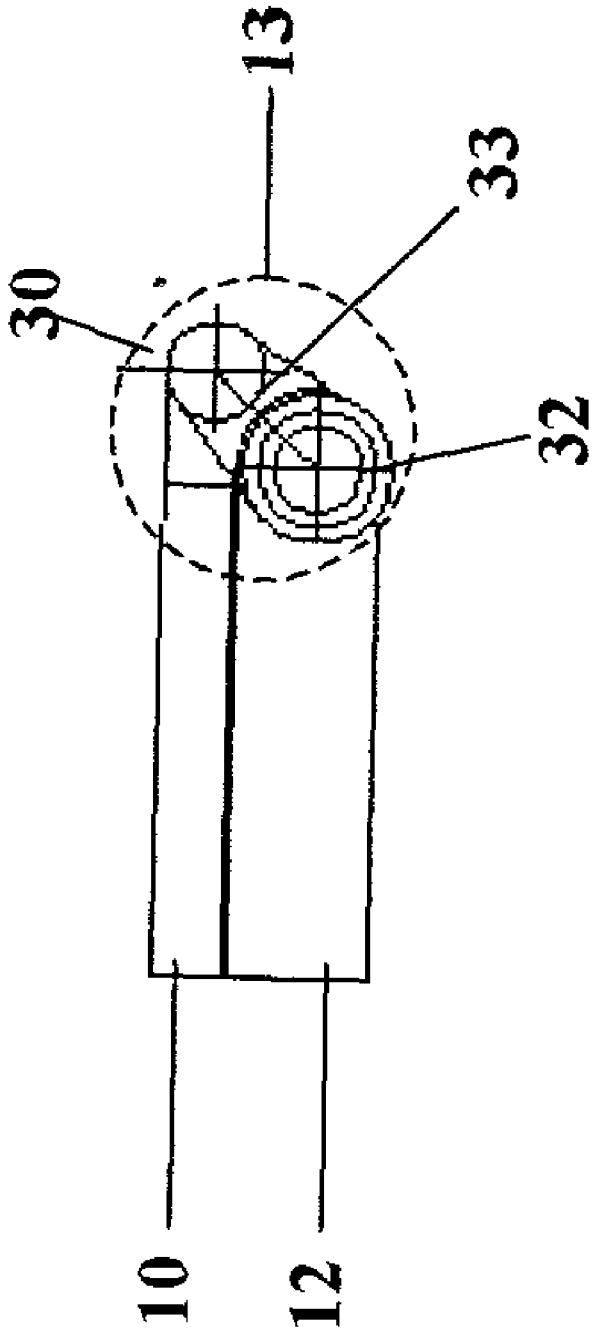

Fig. 2(a)