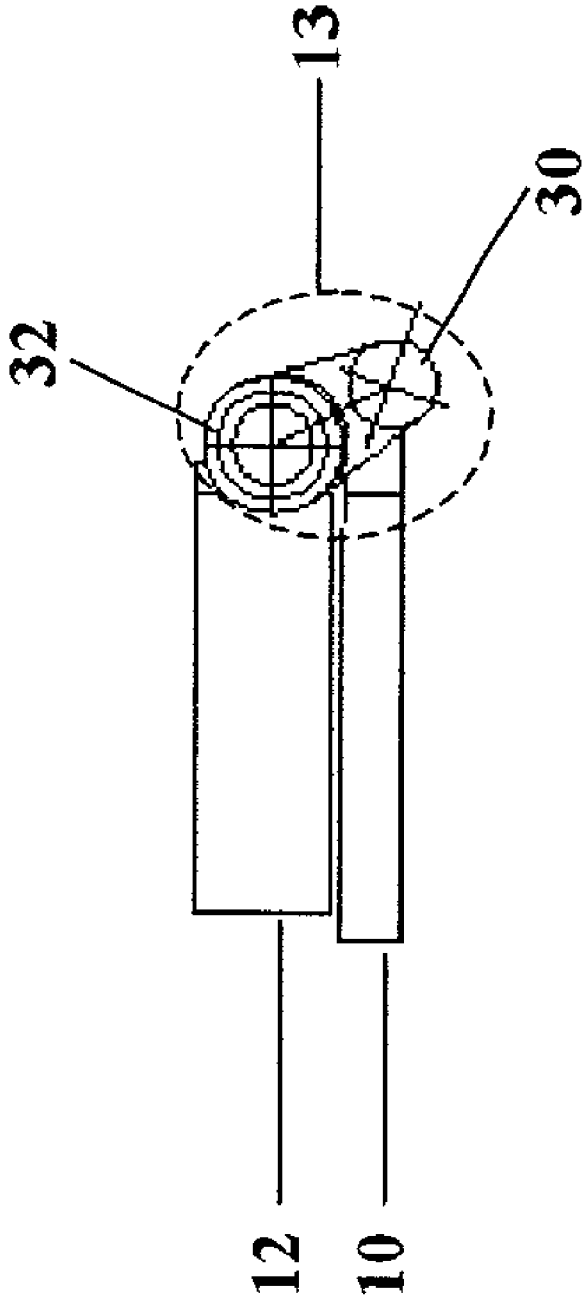

Fig. 2(c)