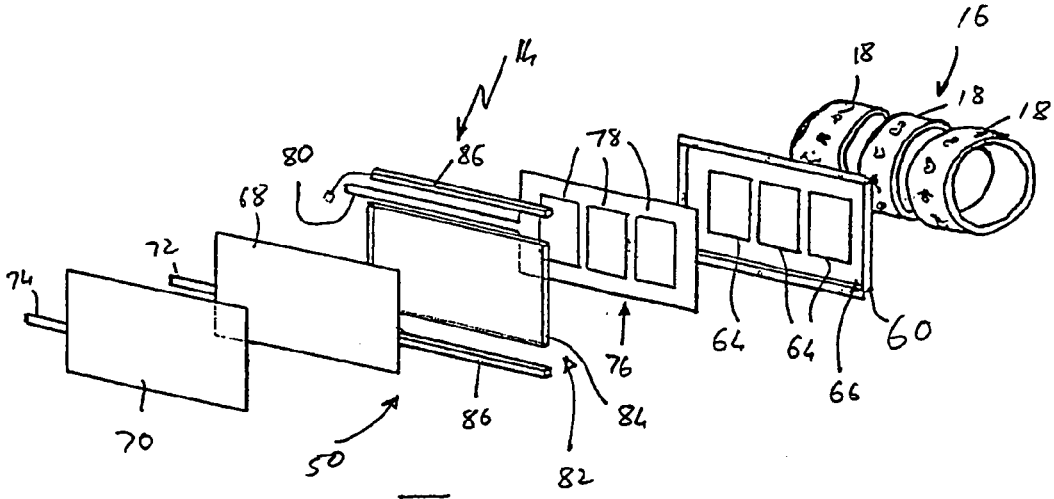
16
14
18
18
18
80
86
78
68
72
74
64
64
60
66
76
84
86
70
50
82

FIG. 8

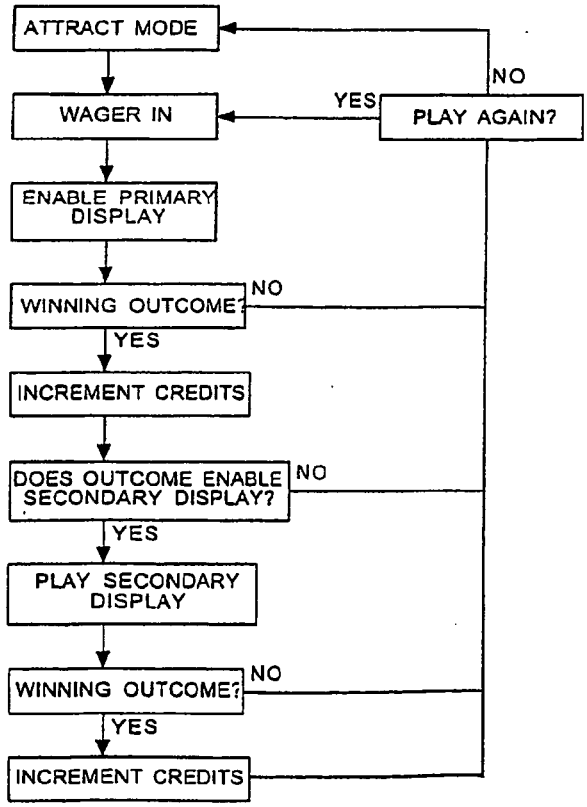
ATTRACT MODE
NO
WAGER IN
YES
PLAY AGAIN?
ENABLE PRIMARY DISPLAY
WINNING OUTCOME?
NO
YES
INCREMENT CREDITS
DOES OUTCOME ENABLE SECONDARY DISPLAY?
NO
YES
PLAY SECONDARY DISPLAY
WINNING OUTCOME?
NO
YES
INCREMENT CREDITS

FIG. 9