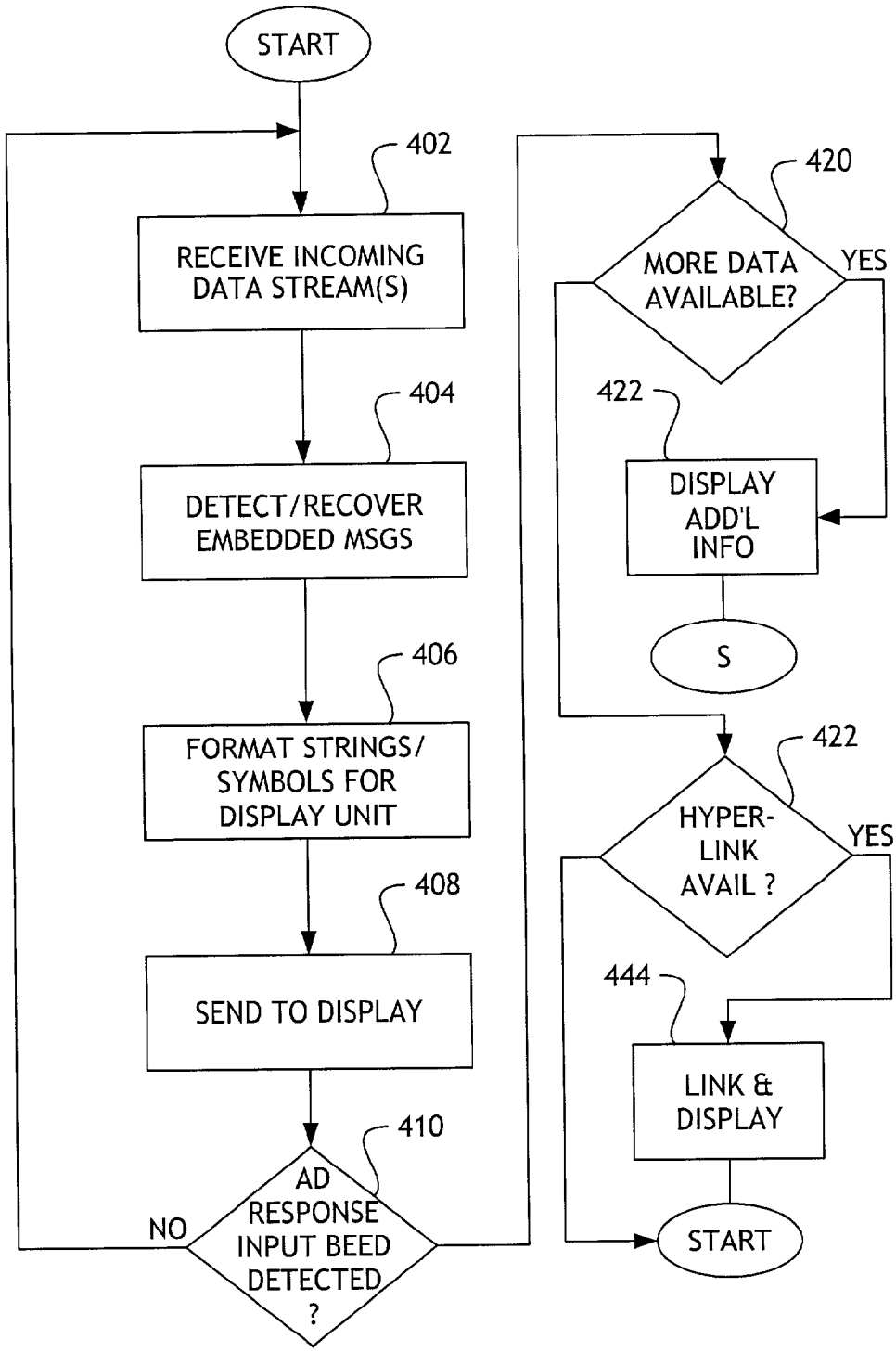
START
402
RECEIVE INCOMING DATA STREAM(S)
404
DETECT/RECOVER EMBEDDED MSGS
406
FORMAT STRINGS/ SYMBOLS FOR DISPLAY UNIT
408
SEND TO DISPLAY
410
AD RESPONSE INPUT BEED DETECTED ?
NO
420
MORE DATA AVAILABLE?
YES
422
DISPLAY ADD'L INFO
S
422
HYPER-LINK AVAIL ?
YES
444
LINK & DISPLAY
START

Fig. 4