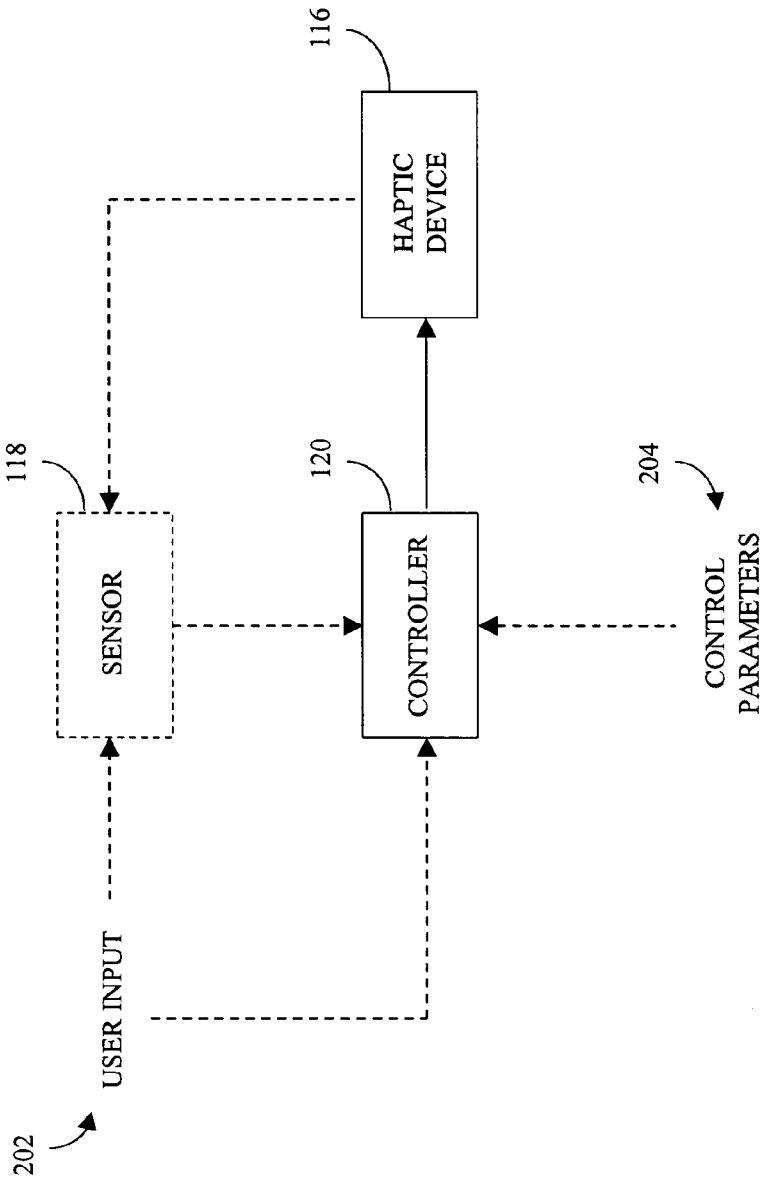
202
USER INPUT
118
SENSOR
120
CONTROLLER
116
HAPTIC DEVICE
204
CONTROL PARAMETERS

Fig. 2