US 20080136791A1

(19) United States

(12) Patent Application Publication

(10) Pub. No.: US 2008/0136791 A1

(43) Pub. Date: Jun. 12, 2008

Nissar

(54) LIQUID RESISTIVE TOUCH PANEL

(75) Inventor: **Bengt Fredrik Nissar**, Stockholm (SE)

Correspondence Address:
HARRITY SNYDER, L.L.P.
11350 RANDOM HILLS ROAD, SUITE 600
FAIRFAX, VA 22030

(73) Assignee: **SONY ERICSSON MOBILE COMMUNICATIONS AB**, Lund (SE)

(21) Appl. No.: **11/620,489**

(22) Filed: **Jan. 5, 2007**

**Related U.S. Application Data**

(60) Provisional application No. 60/868,979, filed on Dec. 7, 2006.

**Publication Classification**

(51) **Int. Cl.**
*G06F 3/045* (2006.01)

(52) **U.S. Cl.** ..... **345/174**

(57) **ABSTRACT**
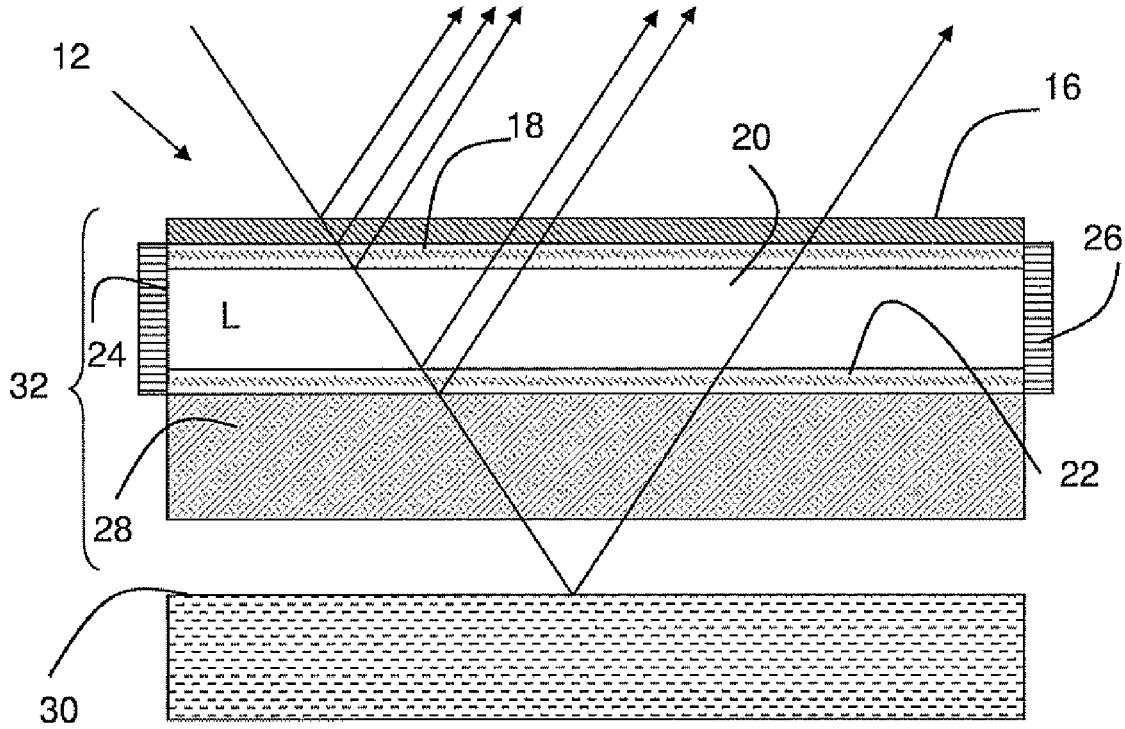
A portable electronic device may include a resistive touch panel that may include an information presentation device. The resistive touch panel may include a flexible outer electrically conducting layer, an inner electrically conducting layer, and a separating chamber containing a liquid may be provided between the outer and inner electrically conducting layers.