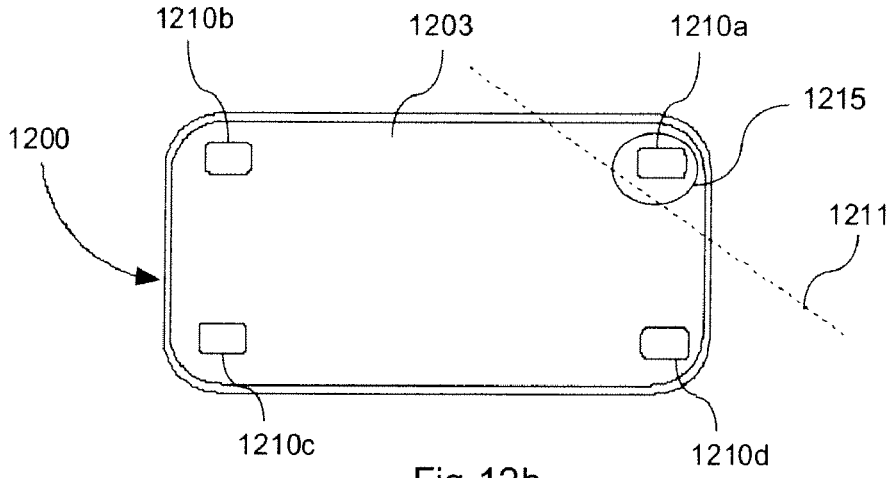

Fig 12b

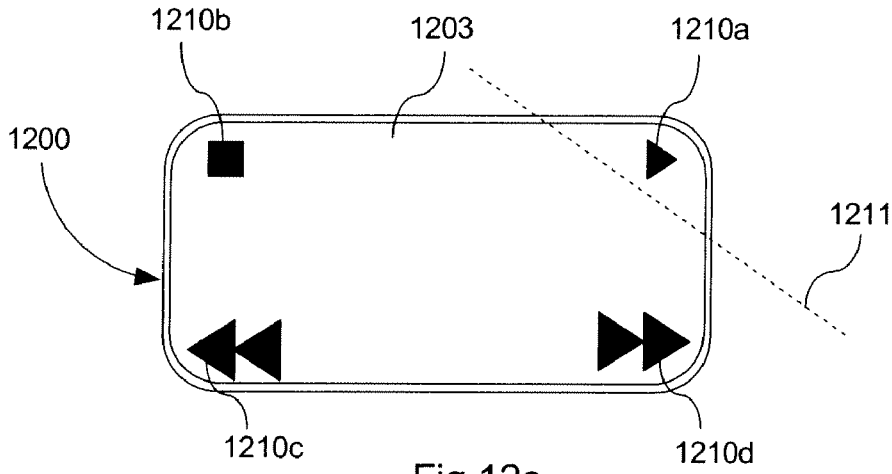

Fig 12c

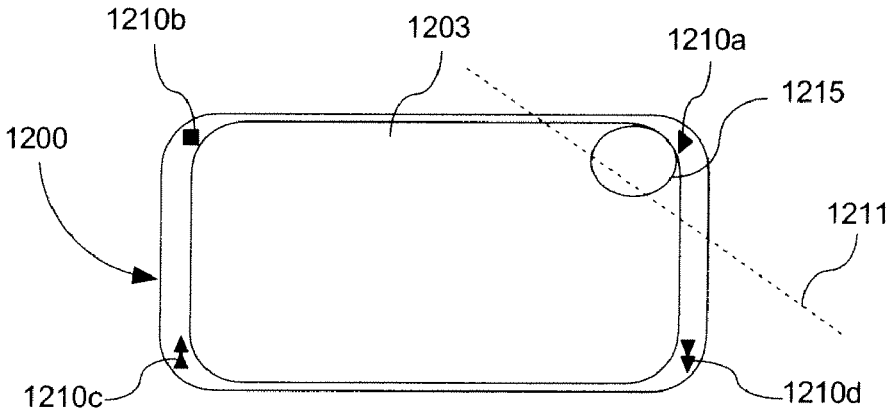

Fig 12d