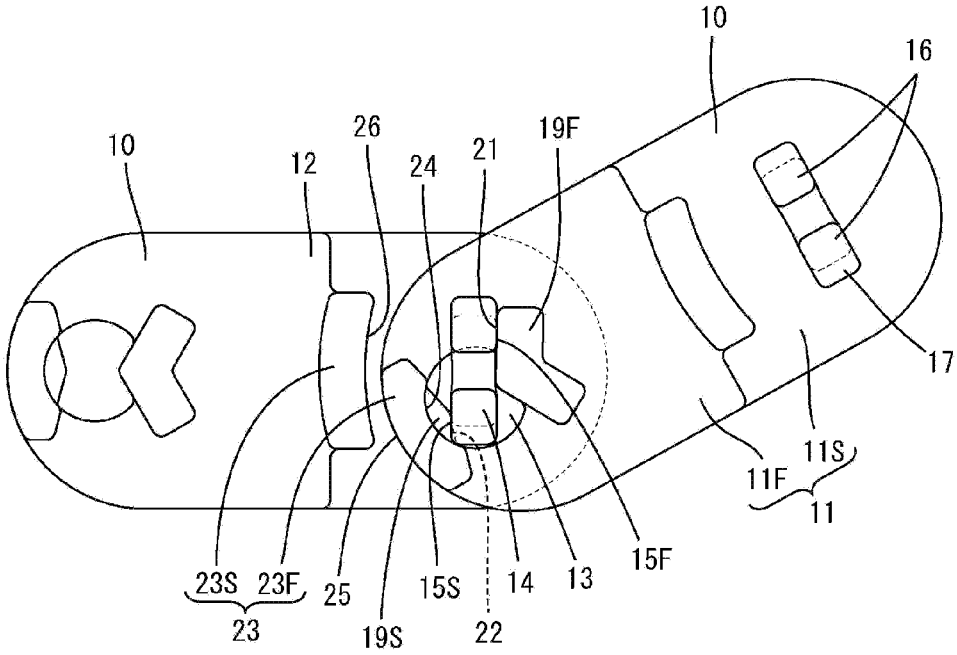
10
16
10
12
26
24
21
19F
17
11S
11F
11
15F
13
14
15S
25
23S
23F
23
19S
22

Figure 13