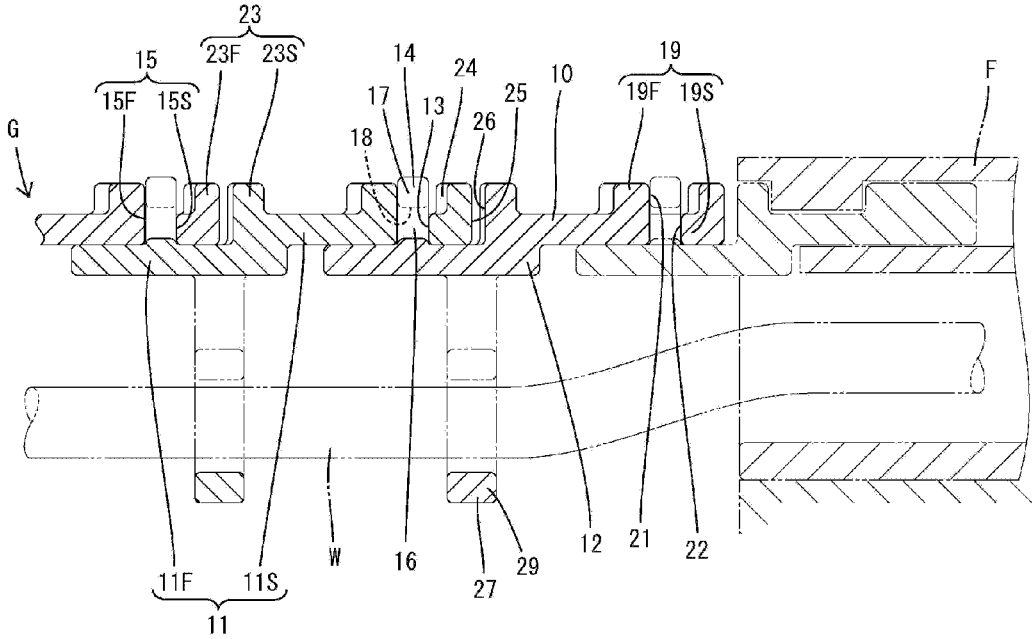
23
15
23F
23S
14
24
10
19
F
15F
15S
17
13
25
19F
19S
G
18
26
11F
11S
W
16
27
29
12
21
22
11

Figure 4