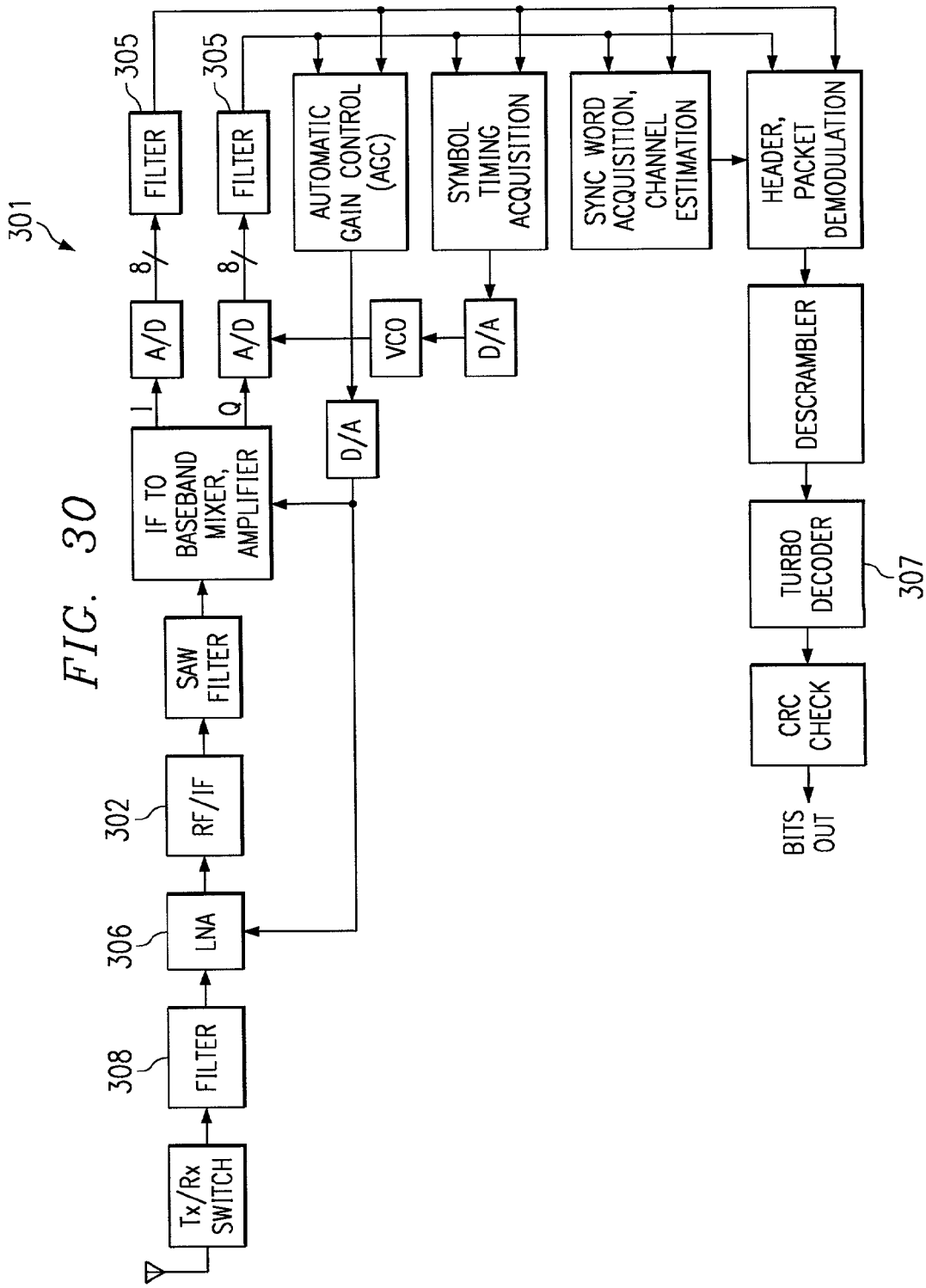
301
Tx/Rx SWITCH
308
FILTER
306
LNA
302
RF/IF
SAW FILTER
IF TO BASEBAND MIXER, AMPLIFIER
I
Q
A/D
A/D
8
8
305
FILTER
305
FILTER
D/A
VCO
D/A
AUTOMATIC GAIN CONTROL (AGC)
SYMBOL TIMING ACQUISITION
SYNC WORD ACQUISITION, CHANNEL ESTIMATION
HEADER, PACKET DEMODULATION
DESCRAMBLER
TURBO DECODER
307
CRC CHECK
BITS OUT

FIG. 30