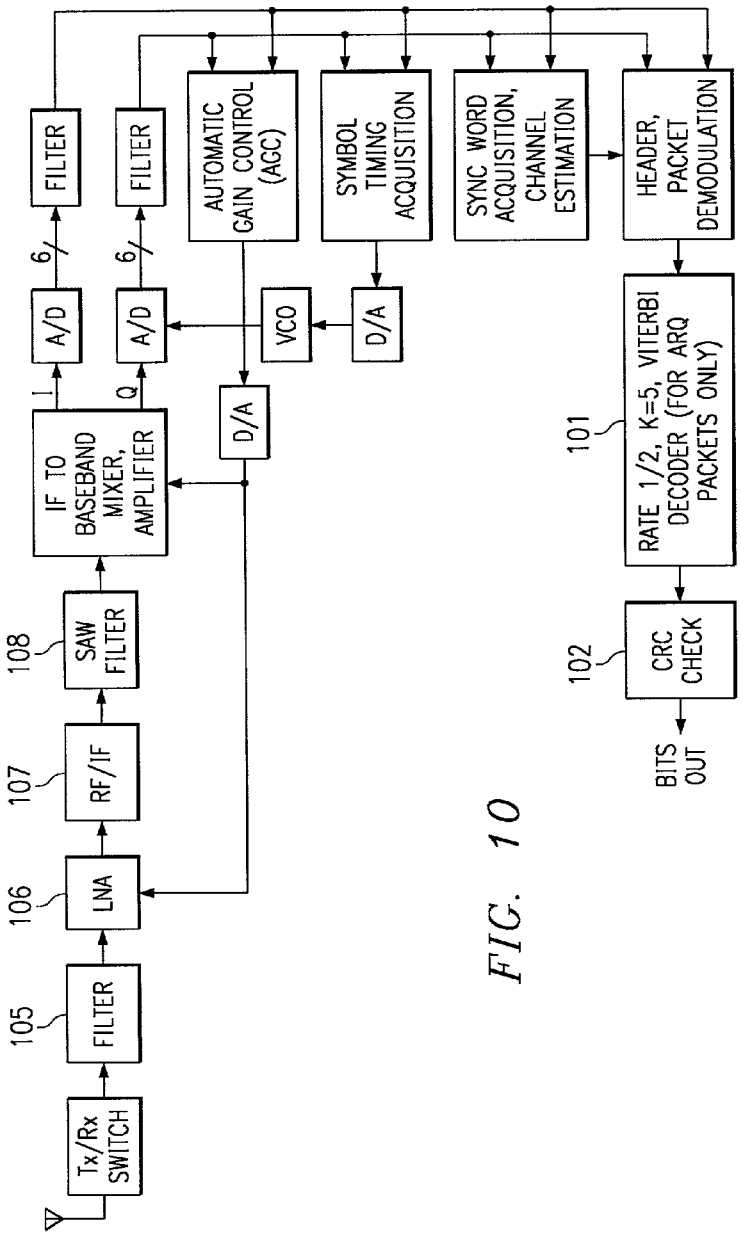
Tx/Rx SWITCH
105
FILTER
106
LNA
107
RF/IF
108
SAW FILTER
IF TO BASEBAND MIXER, AMPLIFIER
I
Q
A/D
A/D
6
6
FILTER
FILTER
D/A
VCO
D/A
AUTOMATIC GAIN CONTROL (AGC)
SYMBOL TIMING ACQUISITION
SYNC WORD ACQUISITION, CHANNEL ESTIMATION
HEADER, PACKET DEMODULATION
101
RATE 1/2, K=5, VITERBI DECODER (FOR ARQ PACKETS ONLY)
102
CRC CHECK
BITS OUT

FIG. 10

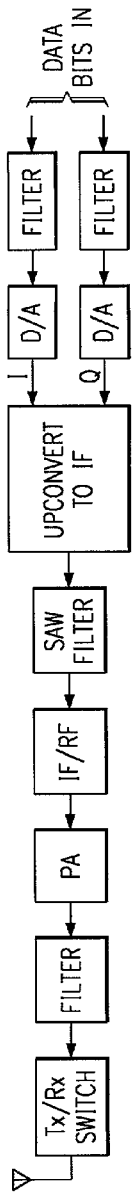
DATA BITS IN
FILTER
FILTER
D/A
D/A
I
Q
UPCONVERT TO IF
SAW FILTER
IF/RF
PA
FILTER
Tx/Rx SWITCH

FIG. 11