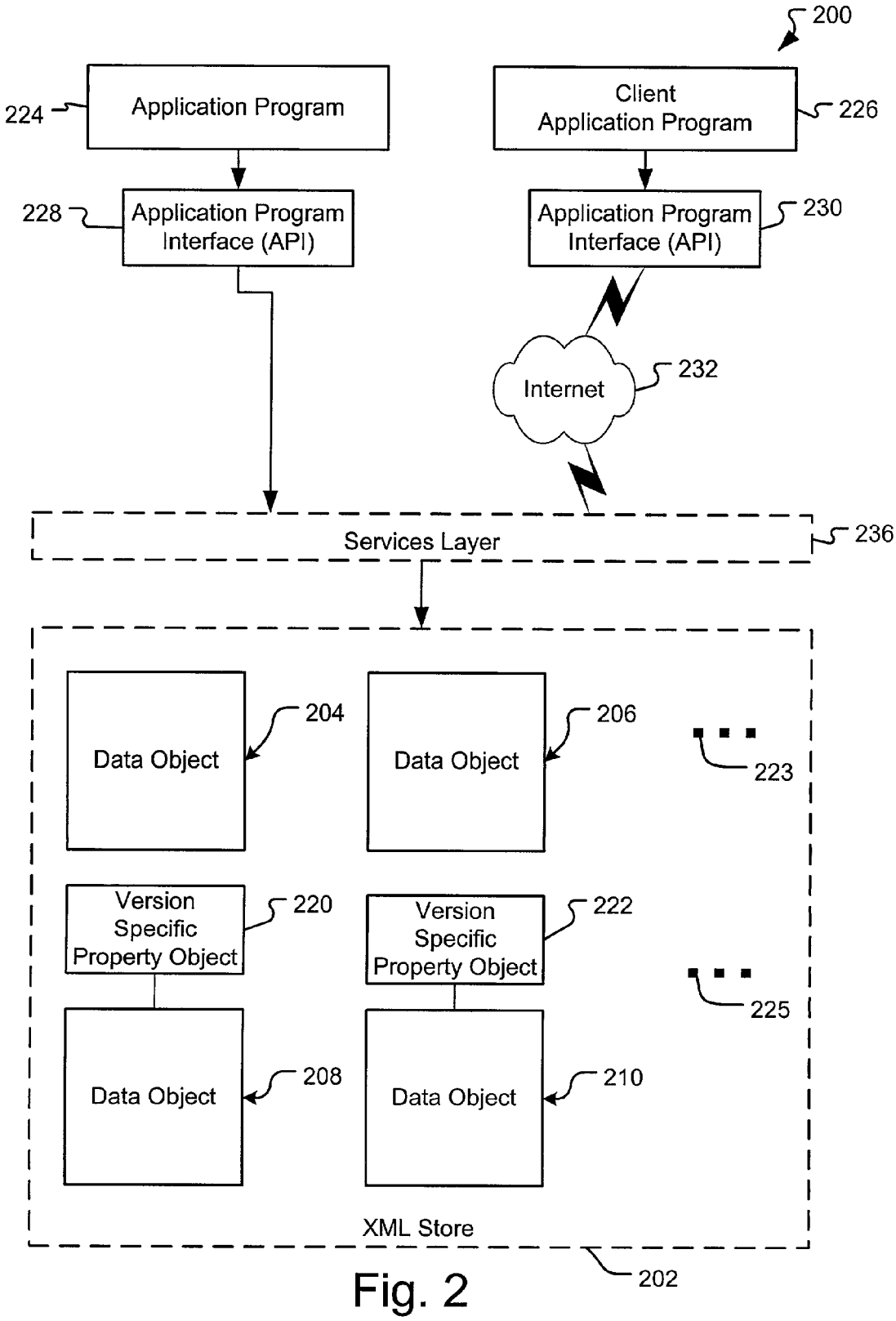
200
224
Application Program
Client
Application Program
226
228
Application Program
Interface (API)
Application Program
Interface (API)
230
Internet
232
Services Layer
236
Data Object
204
Data Object
206
223
Version
Specific
Property Object
220
Version
Specific
Property Object
222
225
Data Object
208
Data Object
210
XML Store
202

Fig. 2