FIG.5

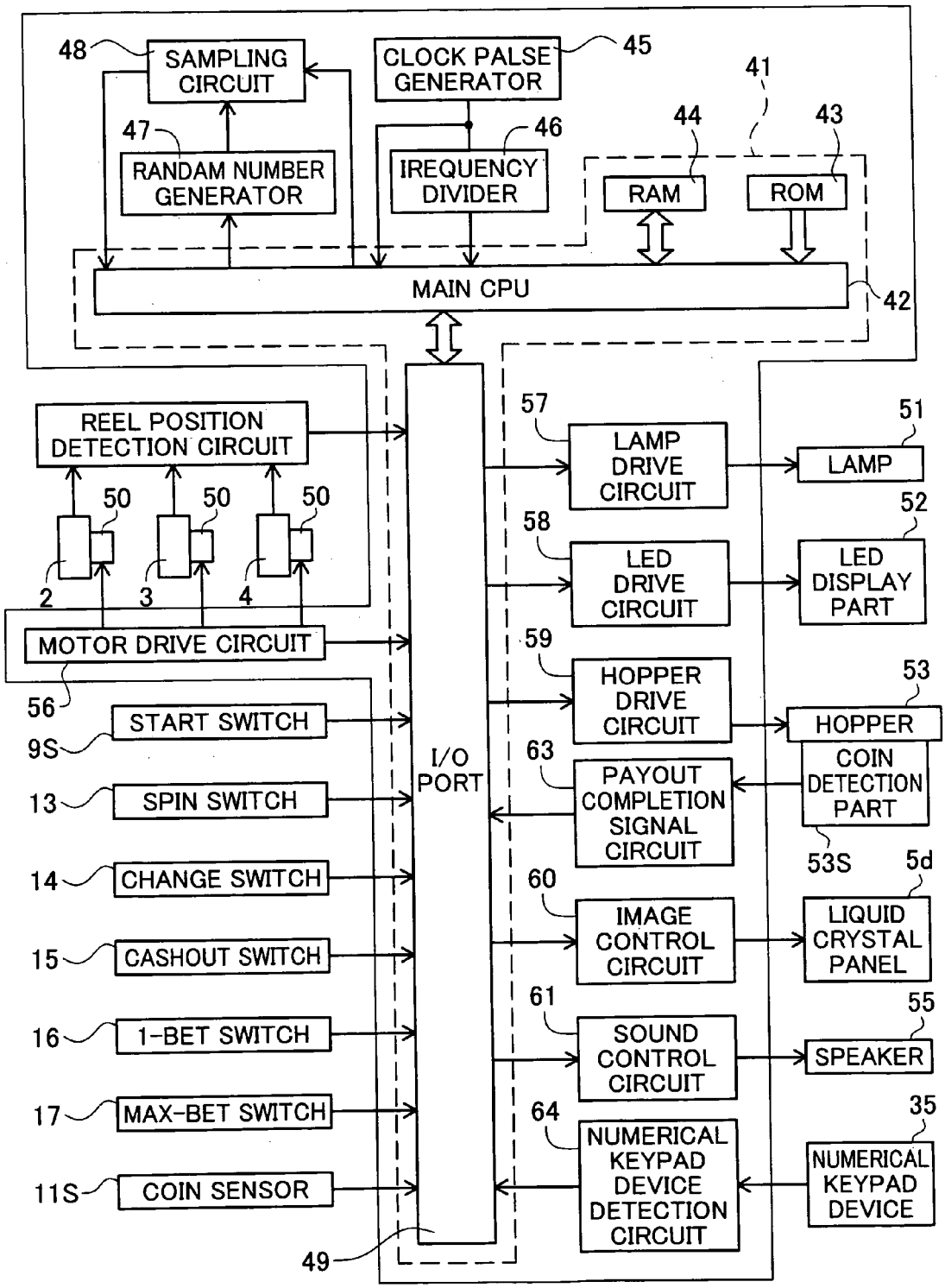
48
SAMPLING CIRCUIT
CLOCK PALSE GENERATOR
45
41
47
RANDAM NUMBER GENERATOR
46
IREQUENCY DIVIDER
44
43
RAM
ROM
MAIN CPU
42
REEL POSITION DETECTION CIRCUIT
50
50
50
2
3
4
MOTOR DRIVE CIRCUIT
56
START SWITCH
9S
SPIN SWITCH
13
CHANGE SWITCH
14
CASHOUT SWITCH
15
1-BET SWITCH
16
MAX-BET SWITCH
17
COIN SENSOR
11S
I/O PORT
49
57
LAMP DRIVE CIRCUIT
51
LAMP
58
LED DRIVE CIRCUIT
52
LED DISPLAY PART
59
HOPPER DRIVE CIRCUIT
53
HOPPER
63
PAYOUT COMPLETION SIGNAL CIRCUIT
COIN DETECTION PART
53S
60
IMAGE CONTROL CIRCUIT
5d
LIQUID CRYSTAL PANEL
61
SOUND CONTROL CIRCUIT
55
SPEAKER
64
NUMERICAL KEYPAD DEVICE DETECTION CIRCUIT
35
NUMERICAL KEYPAD DEVICE