FIG.6

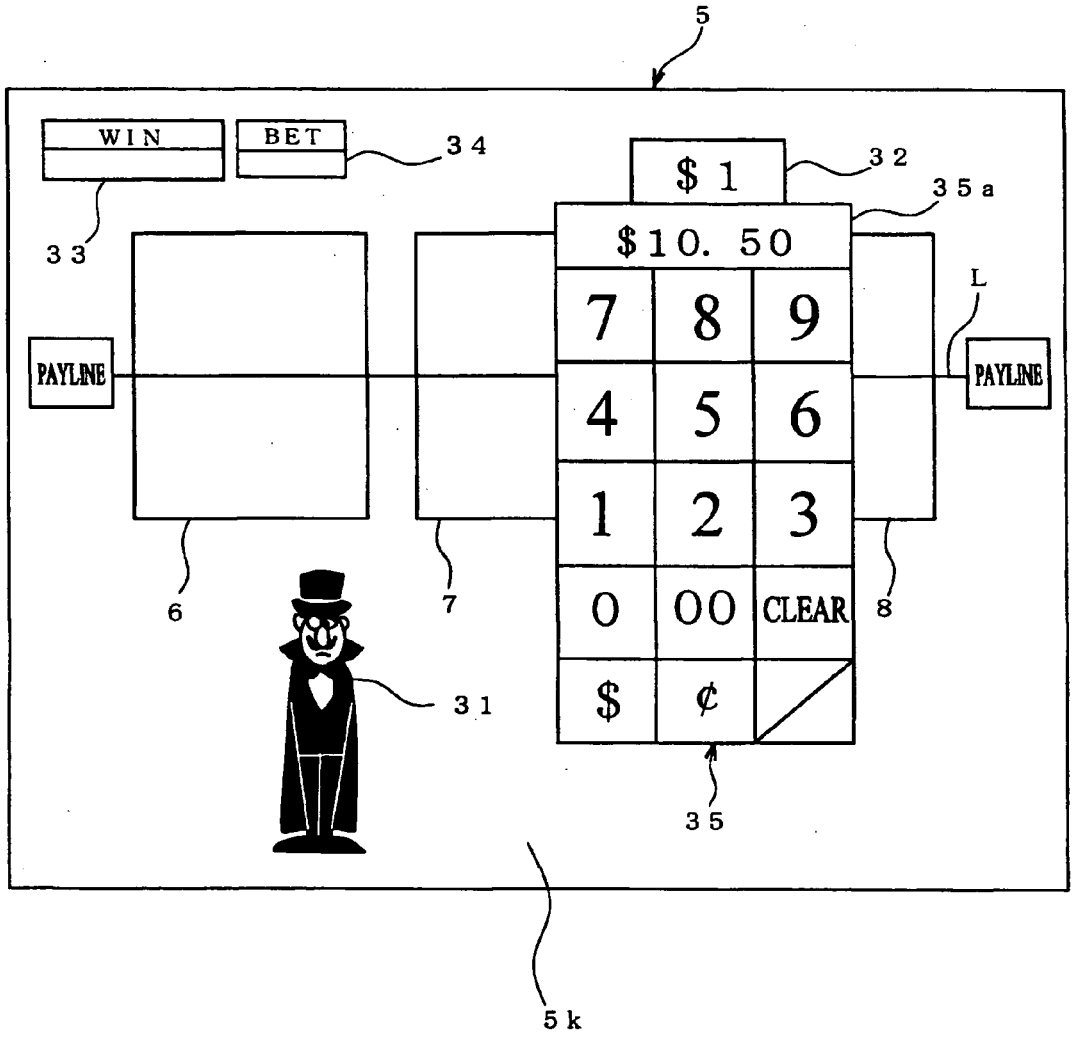
5
WIN
BET
34
$ 1
32
35a
33
$10. 50
L
7
8
9
PAYLINE
4
5
6
PAYLINE
1
2
3
6
7
0
00
CLEAR
8
31
$
¢
35
5k