US 20160345092A1

(19) United States

(12) Patent Application Publication

Virolainen

(10) Pub. No.: US 2016/0345092 A1

(43) Pub. Date: Nov. 24, 2016

(54) **AUDIO CAPTURE APPARATUS**

(71) Applicant: **Nokia Technologies Oy**, Espoo (FI)

(72) Inventor: **Jussi Virolainen**, Espoo (FI)

(73) Assignee: **Nokia Technologies Oy**

(21) Appl. No.: **15/228,408**

(22) Filed: **Aug. 4, 2016**

Related U.S. Application Data

(63) Continuation of application No. 14/406,483, filed on Dec. 8, 2014, now Pat. No. 9,445,174, filed as application No. PCT/IB2012/053004 on Jun. 14, 2012.

Publication Classification

(51) **Int. Cl.**

H04R 1/40	(2006.01)
H04S 7/00	(2006.01)
H04R 3/04	(2006.01)
H04R 1/08	(2006.01)

(52) **U.S. Cl.**

CPC ***H04R 1/406*** (2013.01); ***H04R 1/08*** (2013.01); ***H04S 7/303*** (2013.01); ***H04R 3/04*** (2013.01); *H04R 2203/00* (2013.01); *H04S 2400/15* (2013.01)

(57) **ABSTRACT**
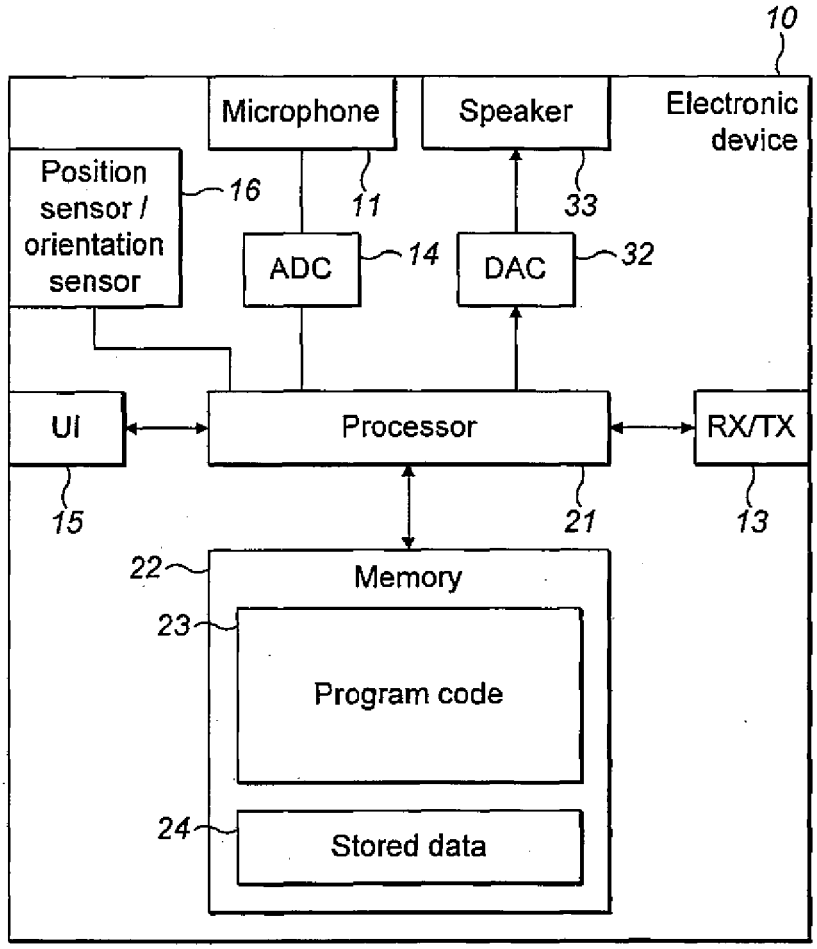
An apparatus comprising: an audio signal analyser configured to analyse at least one audio signal to determine at least one audio component with an associated orientation parameter; a reference definer configured to define at least one of: a reference orientation for an apparatus; and a reference position for the apparatus; a directional determiner configured to determine a direction value based on the reference orientation/position for the apparatus and at least one of: an orientation of the apparatus; a position of the apparatus; an orientation of a further apparatus co-operating with the apparatus; and a position of the further apparatus; and a directional processor configured to process at least one associated directional parameter for the at least one audio component dependent on the direction value.