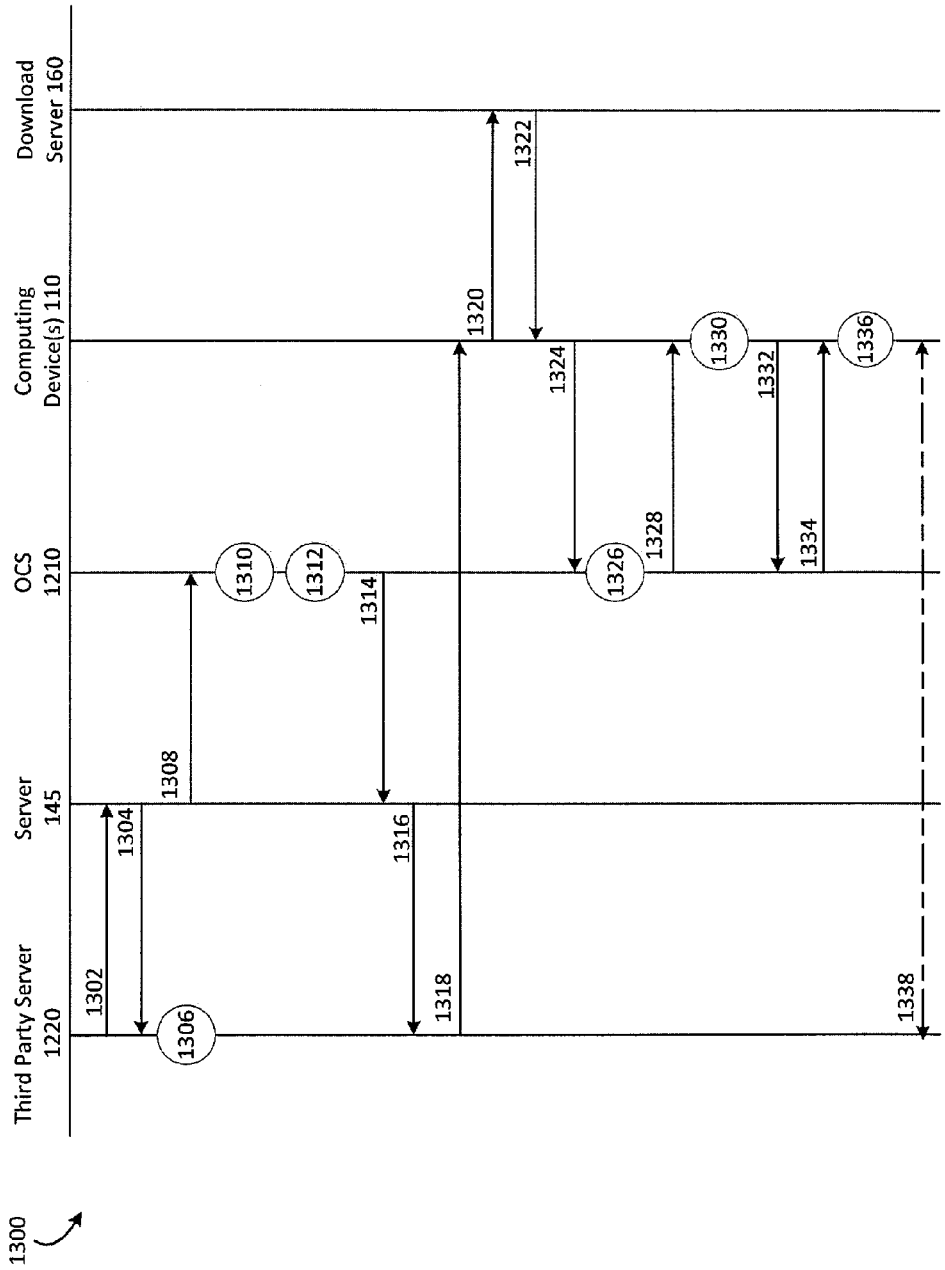
1300
Third Party Server 1220
Server 145
OCS 1210
Computing Device(s) 110
Download Server 160
1302
1304
1306
1308
1310
1312
1314
1316
1318
1320
1322
1324
1326
1328
1330
1332
1334
1336
1338

Figure 13