FIG. 2

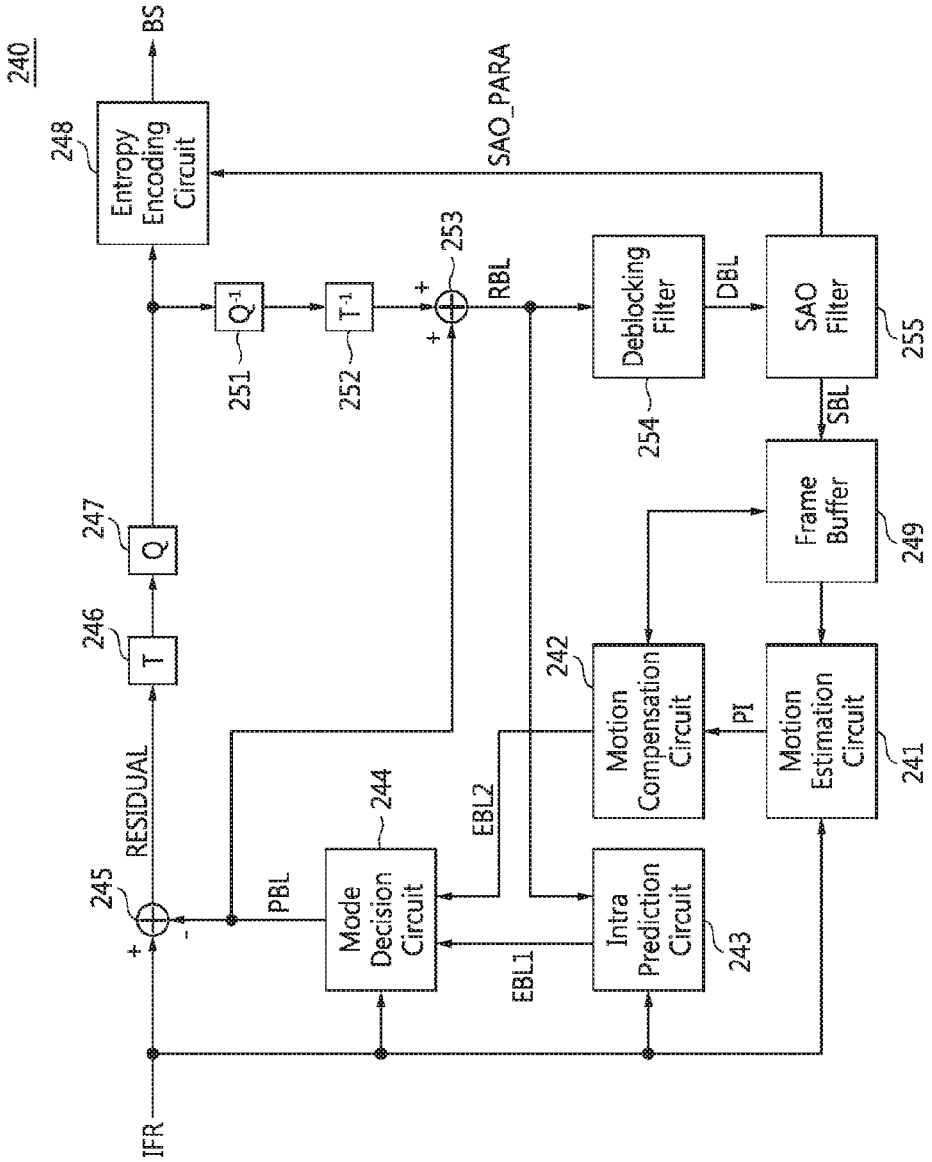
240
BS
248
Entropy Encoding Circuit
SAO_PARA
253
RBL
Deblocking Filter
DBL
SAO Filter
255
Q-1
T-1
251
252
254
SBL
Frame Buffer
249
247
Q
246
T
242
Motion Compensation Circuit
PI
Motion Estimation Circuit
241
RESIDUAL
245
PBL
244
Mode Decision Circuit
EBL2
EBL1
Intra Prediction Circuit
243
IFR