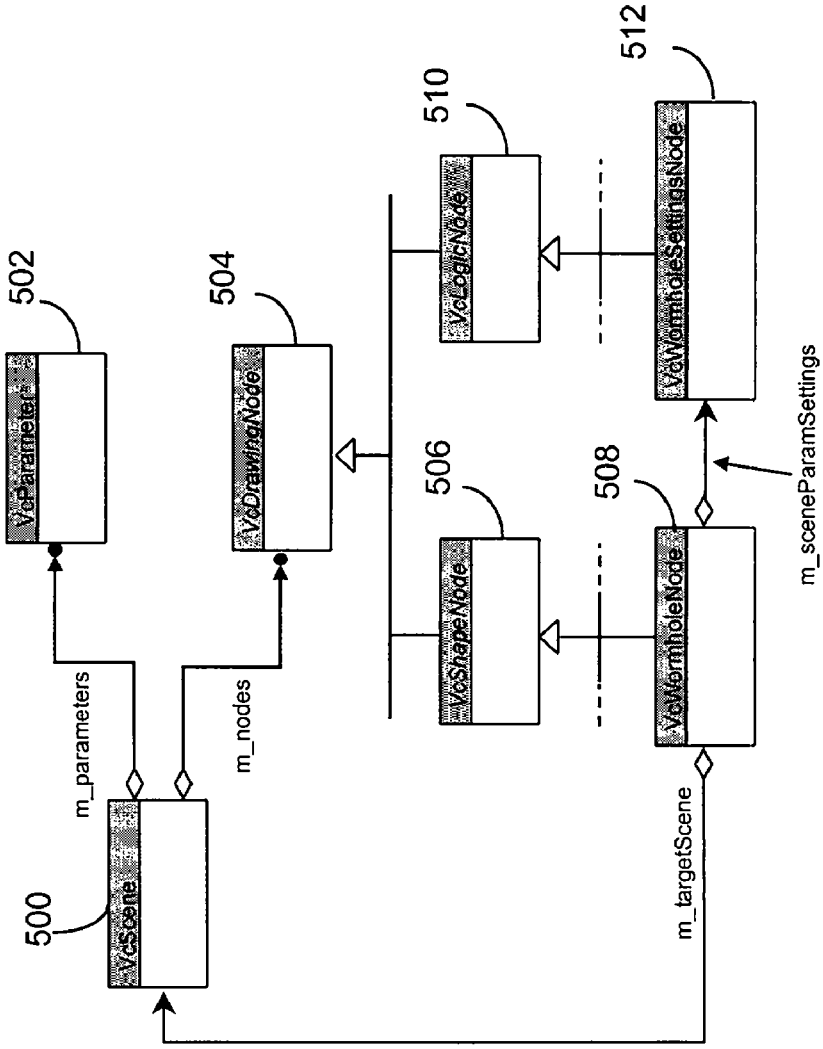
500
VcScene
m_parameters
m_nodes
502
VcParameter
504
VcDrawingNode
506
VcShapeNode
508
VcWormholeNode
510
VcLogicNode
512
VcWormholeSettingsNode
m_sceneParamSettings
m_targetScene

FIG. 14