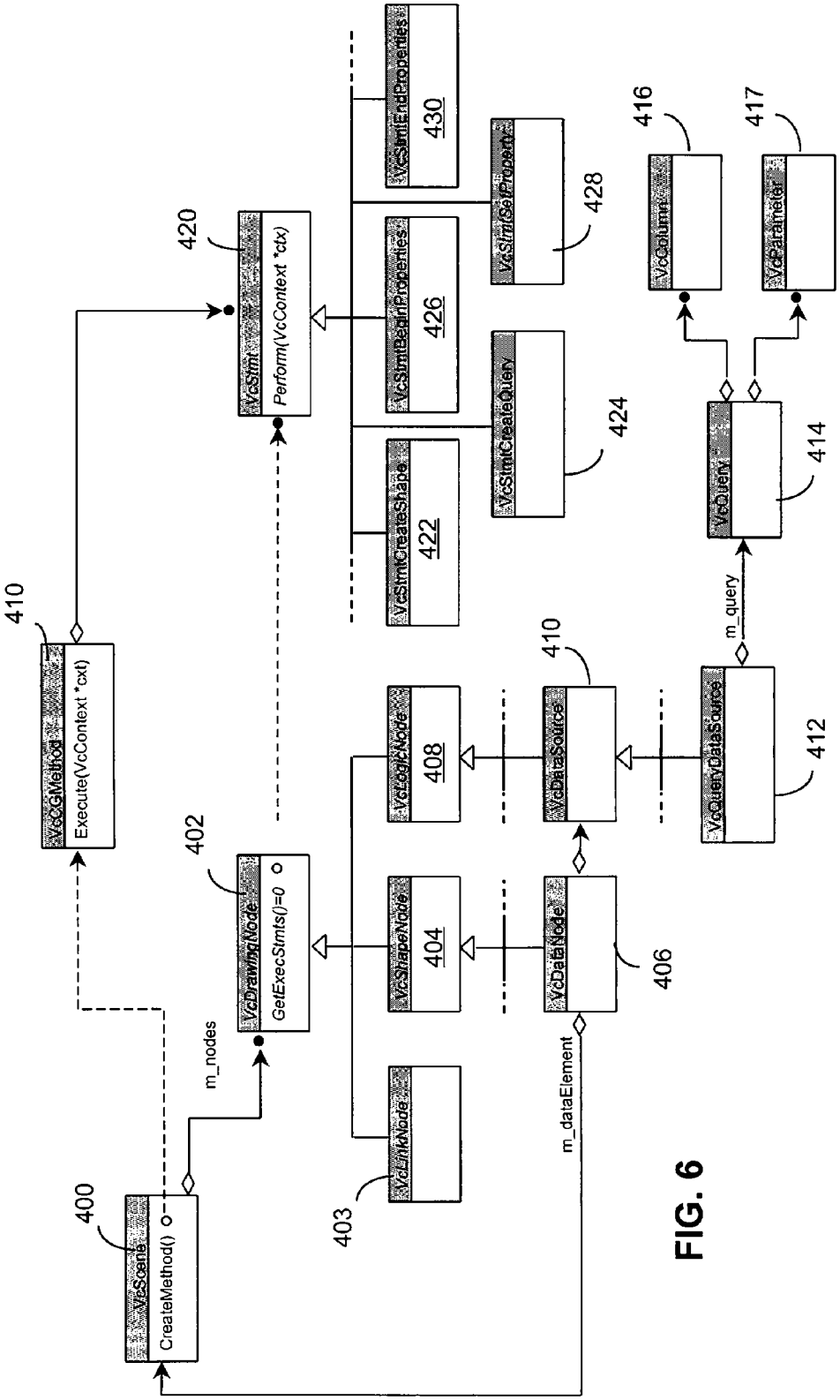
VcScene
CreateMethod()
400
m_nodes
VcDrawingNode
GetExecStmts()=0
402
VcLinkNode
403
VcShapeNode
404
VcDataNode
406
m_dataElement
VcLogicNode
408
VcDataSource
410
VcQueryDataSource
412
m_query
VcQuery
414
VcColumn
416
VcParameter
417
VcCGMethod
Execute(VcContext *cxt)
410
VcStmt
Perform(VcContext *ctx)
420
VcStmtCreateShape
422
VcStmtBeginProperties
426
VcStmtEndProperties
430
VcStmtCreateQuery
424
VcStmtSetProperty
428

FIG. 6