US 20160170593A1

(19) United States

(12) Patent Application Publication

LEHTINIEMI et al.

(10) Pub. No.: US 2016/0170593 A1

(43) Pub. Date: Jun. 16, 2016

(54) **A HOVERING FIELD**

(71) Applicant: **NOKIA TECHNOLOGY OY**, Espoo (FI)

(72) Inventors: **Arto LEHTINIEMI**, Lempaala (FI); **Antti ERONEN**, Tampere (FI); **Juha ARRASVUORI**, Tampere (FI); **Jukka HOLM**, Tampere (FI)

(73) Assignee: **Nokia Corporation**, Espoo (FI)

(21) Appl. No.: **14/900,638**

(22) PCT Filed: **Jun. 24, 2014**

(86) PCT No.: **PCT/FI2014/050504**

§ 371 (c)(1),
(2) Date: **Dec. 22, 2015**

(30) **Foreign Application Priority Data**

Jun. 28, 2013 (EP) 13174305.6

Publication Classification

(51) **Int. Cl.**
G06F 3/0484 (2006.01)

(52) **U.S. Cl.**
CPC *G06F 3/0484* (2013.01)

(57) **ABSTRACT**
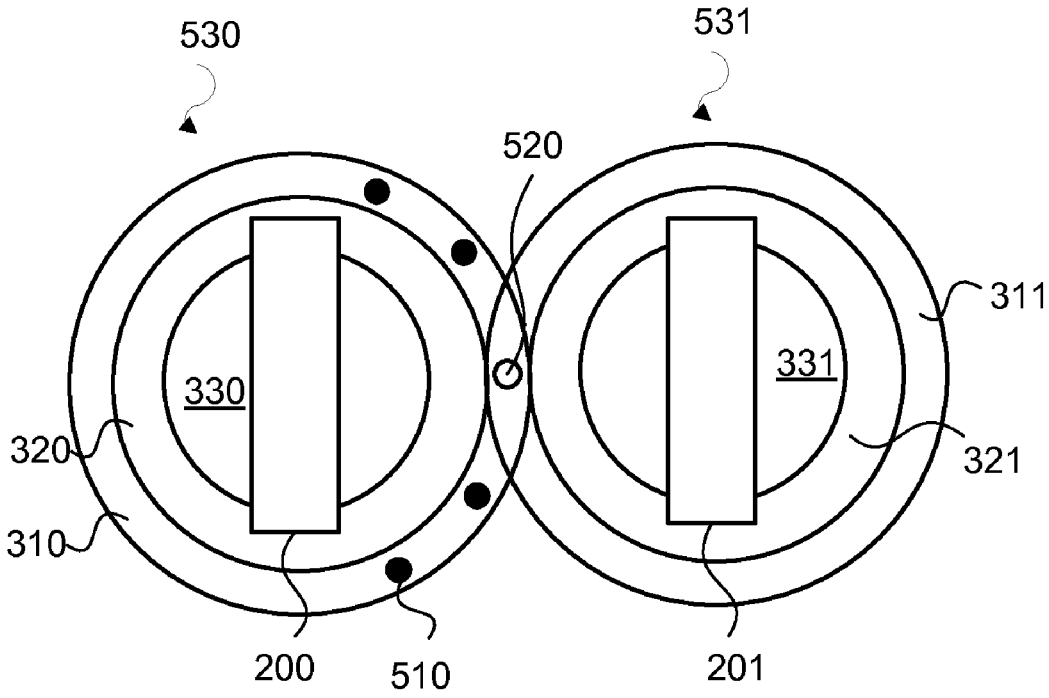
An apparatus, method, and computer program product for: associating a first item with a first portion of a hovering field, the hovering field at least partially encompassing a device, and associating a second item with a second portion of the hovering field, wherein the relative positions of the first portion and the second portion correspond to the relative positions of the first item and the second item in a data structure.