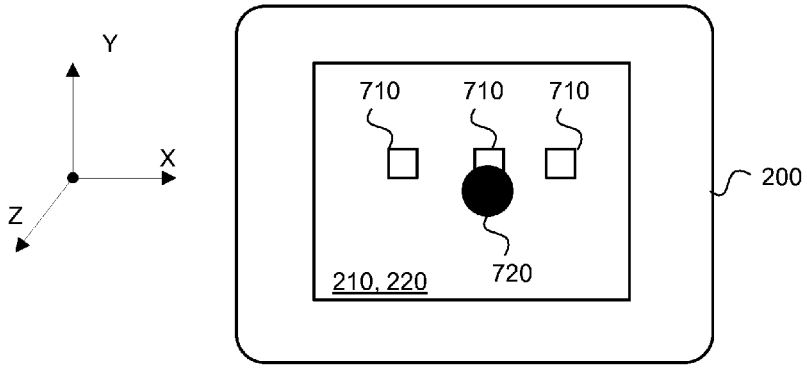

FIGURE 4a

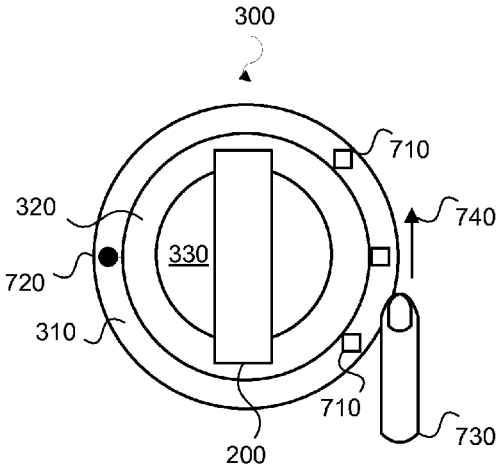

FIGURE 4b

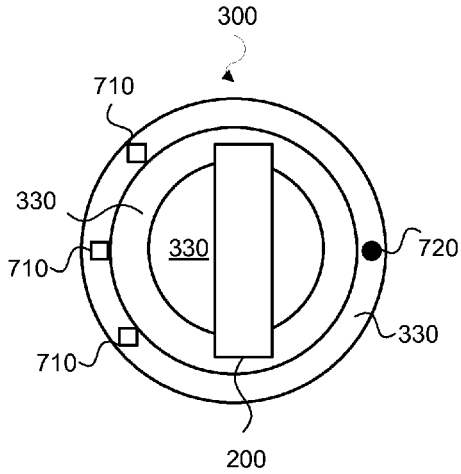

FIGURE 4c