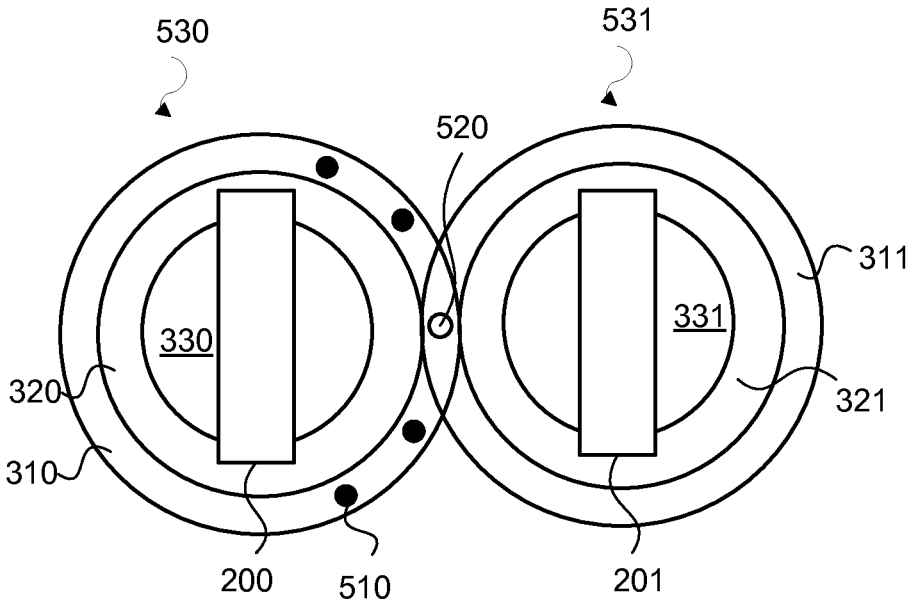

FIGURE 7