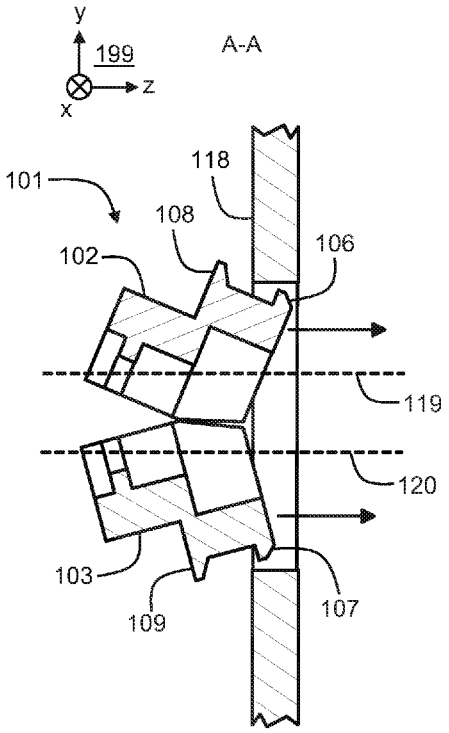

Figure 1d

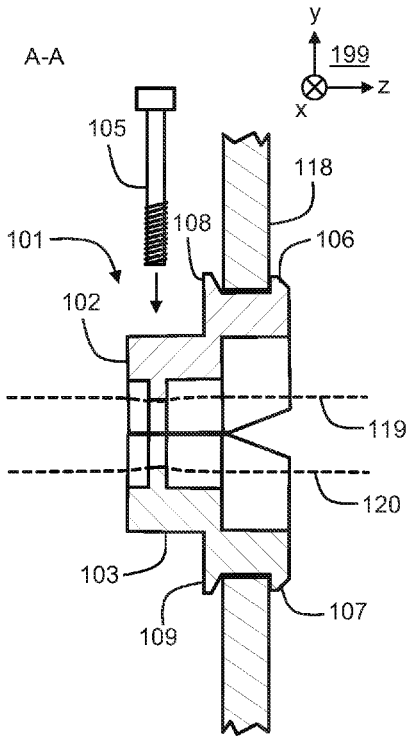

Figure 1e