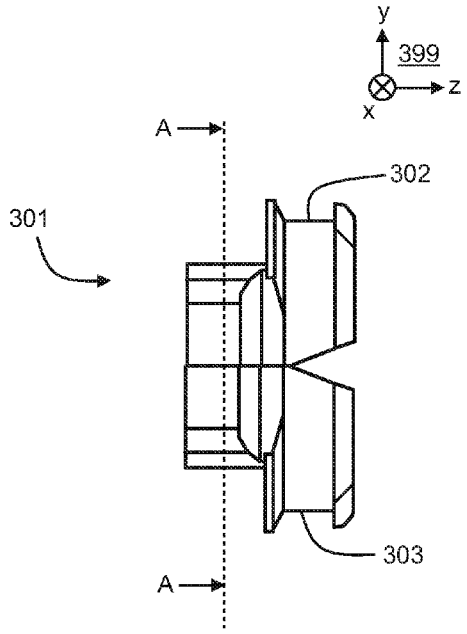

Figure 3a

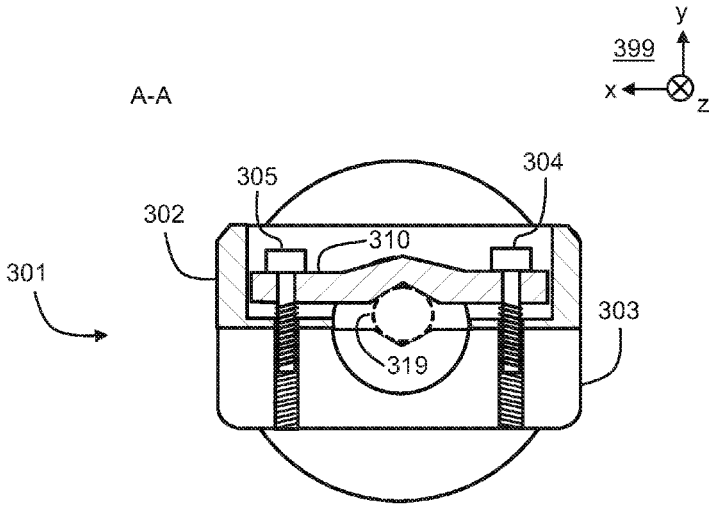

Figure 3b