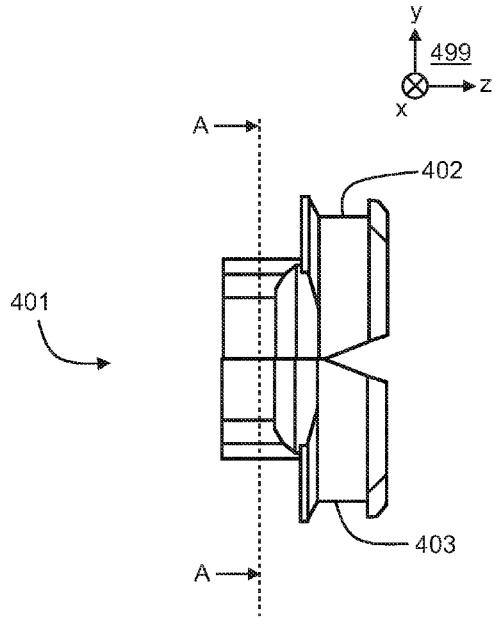

Figure 4a

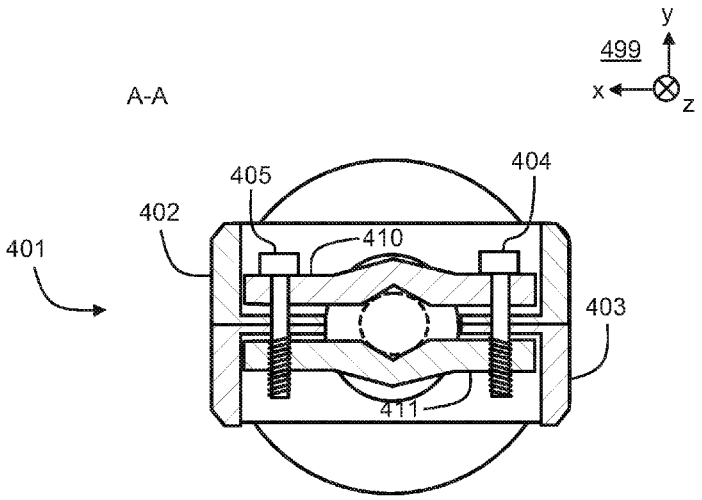

Figure 4b