FIG. 10

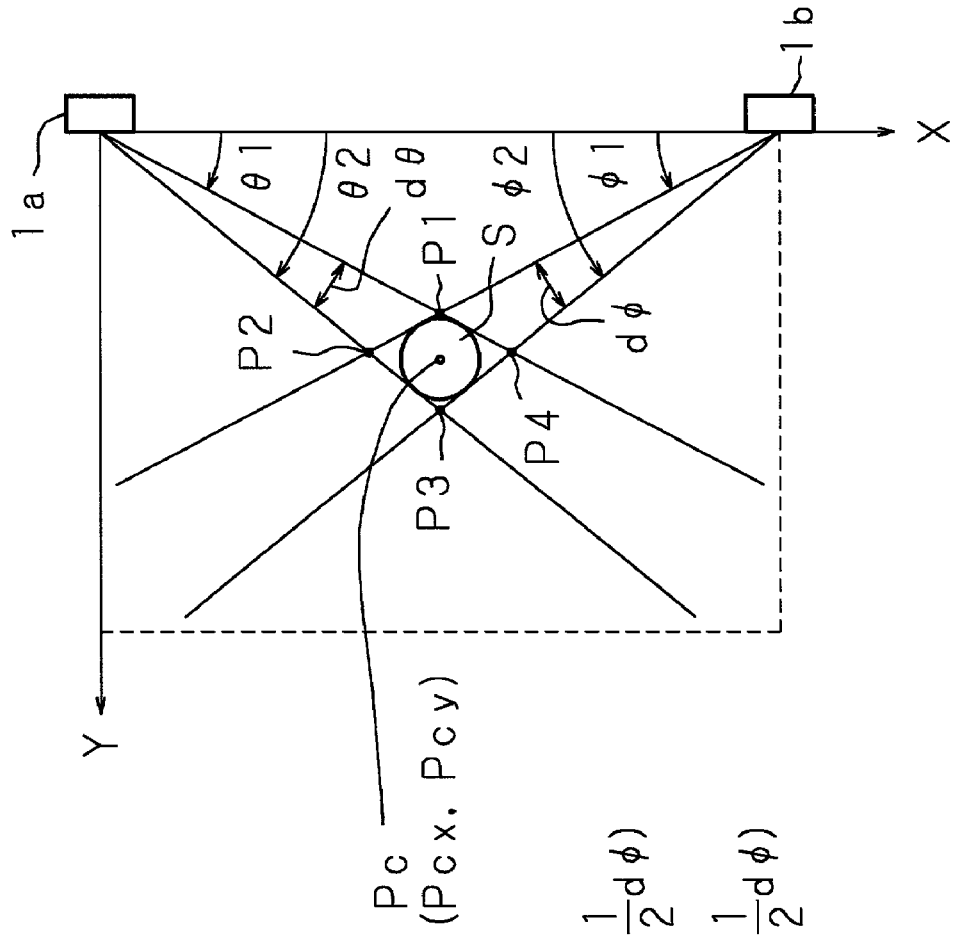

$$\begin{cases} Pcx = Pcx\left(\theta 1 + \frac{1}{2}d\theta,\ \phi 1 + \frac{1}{2}d\phi\right) \\ Pcy = Pcy\left(\theta 1 + \frac{1}{2}d\theta,\ \phi 1 + \frac{1}{2}d\phi\right) \end{cases}$$